Internal Use Only

LG

North/Latin America	http://aic.lgservice.com
Europe/Africa	http://eic.lgservice.com
Asia/Oceania	http://biz.lgservice.com

PLASMA TV
SERVICE MANUAL

CHASSIS : PD12A

MODEL : 50PZ950 50PZ950-ZA

CAUTION

BEFORE SERVICING THE CHASSIS,
READ THE SAFETY PRECAUTIONS IN THIS MANUAL.

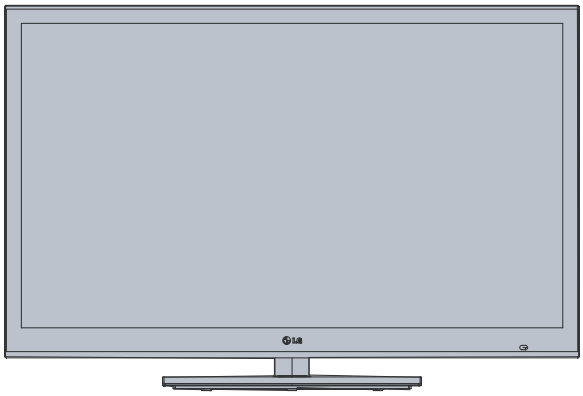

P/NO : MFL66982501(1012-REV00)

Printed in Korea

CONTENTS

CONTENTS 2

SAFETY PRECAUTIONS 3

SPECIFICATION 4

ADJUSTMENT INSTRUCTION 6

BLOCK DIAGRAM 11

EXPLODED VIEW 12

CIRCUIT DIAGRAM .....

Copyright ©2010 LG Electronics Inc. All rights reserved.
Only for training and service purposes

LGE Internal Use Only

SAFETY PRECAUTIONS

IMPORTANT SAFETY NOTICE

Many electrical and mechanical parts in this chassis have special safety-related characteristics. These parts are identified by ⚠ in the Schematic Diagram and Exploded View.
It is essential that these special safety parts should be replaced with the same components as recommended in this manual to prevent X-RADIATION, Shock, Fire, or other Hazards.
Do not modify the original design without permission of manufacturer.

General Guidance

An **isolation Transformer should always be used** during the servicing of a receiver whose chassis is not isolated from the AC power line. Use a transformer of adequate power rating as this protects the technician from accidents resulting in personal injury from electrical shocks.

It will also protect the receiver and it's components from being damaged by accidental shorts of the circuitry that may be inadvertently introduced during the service operation.

If any fuse (or Fusible Resistor) in this monitor is blown, replace it with the specified.

When replacing a high wattage resistor (Oxide Metal Film Resistor, over 1W), keep the resistor 10mm away from PCB.

Keep wires away from high voltage or high temperature parts.

Due to high vacuum and large surface area of picture tube, extreme care should be used in **handling the Picture Tube.**
Do not lift the Picture tube by it's Neck.

Leakage Current Cold Check(Antenna Cold Check)
With the instrument AC plug removed from AC source, connect an electrical jumper across the two AC plug prongs. Place the AC switch in the on position, connect one lead of ohm-meter to the AC plug prongs tied together and touch other ohm-meter lead in turn to each exposed metallic parts such as antenna terminals, phone jacks, etc.
If the exposed metallic part has a return path to the chassis, the measured resistance should be between 1MΩ and 5.2MΩ.
When the exposed metal has no return path to the chassis the reading must be infinite.
An other abnormality exists that must be corrected before the receiver is returned to the customer.

Leakage Current Hot Check (See below Figure)
Plug the AC cord directly into the AC outlet.
Do not use a line Isolation Transformer during this check.
Connect 1.5K/10watt resistor in parallel with a 0.15uF capacitor between a known good earth ground (Water Pipe, Conduit, etc.) and the exposed metallic parts.
Measure the AC voltage across the resistor using AC voltmeter with 1000 ohms/volt or more sensitivity.
Reverse plug the AC cord into the AC outlet and repeat AC voltage measurements for each exposed metallic part. Any voltage measured must not exceed 0.75 volt RMS which is corresponds to 0.5mA.
In case any measurement is out of the limits specified, there is possibility of shock hazard and the set must be checked and repaired before it is returned to the customer.

Leakage Current Hot Check circuit

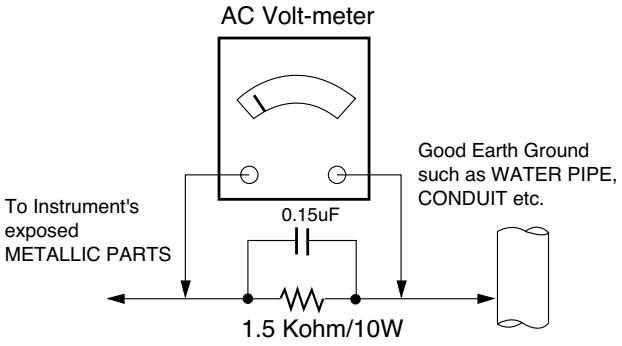

Copyright ©2010 LG Electronics Inc. All rights reserved.
Only for training and service purposes

LGE Internal Use Only

SPECIFICATIONS

NOTE : Specifications and others are subject to change without notice for improvement.

■ Application Range

This spec is applied to PDP TV used PD12A Chassis.

Model Name	Market Place	Brand
50PZ950-ZA	Albania, Austria, Belgium, Bosnia, Bulgaria, Coratia, Czech, Denmark, Estonia, Finland, France, Germany, Greece, Hungary, Ireland, Italy, Kazakhstan, Latvia, Lithuania, Luxembourg, Morocco, Netherlands, Norway, Poland, Portugal, Romania, Russia, Serbia, Slovakia, Slovenia, Spain, Sweden, Switzerland, Turkey, Ukraine, UK	LG

■ Specification

Each part is tested as below without special appointment.

(1) Temperature : 25 °C ± 5 °C (77 °F ± 9 °F), CST : 40 ± 5
(2) Relative Humidity: 65 % ± 10 %
(3) Power Voltage: Standard Input voltage (100 V - 240 V ~, 50 / 60 Hz)
 * Standard Voltage of each product is marked by models.
(4) Specification and performance of each parts are followed each drawing and specification by part number in accordance with SBOM.
(5) The receiver must be operated for about 20 minutes prior to the adjustment.

■ Test Method

(1) Performance : LGE TV test method followed.
(2) Demanded other specification
 Safety : CE, IEC specification
 EMC : CE, IEC

Model Name	Market	Remark
50PZ950-ZA	Albania, Austria, Belgium, Bosnia, Bulgaria, Coratia, Czech, Denmark, Estonia, Finland, France, Germany, Greece, Hungary, Ireland, Italy, Kazakhstan, Latvia, Lithuania, Luxembourg, Morocco, Netherlands, Norway, Poland, Portugal, Romania, Russia, Serbia, Slovakia, Slovenia, Spain, Sweden, Switzerland, Turkey, Ukraine, UK	Safety : IEC/ EN60065, EMI : EN55013 EMS : EN55020

■ Module Specification

(1) 3D 50” FHD

No	Item	Specification	Remark
1	Display Screen Device	127 cm (50 inch) wide Color Display Module	PDP
2	Aspect Ratio	16:9	
3	PDP Module	PDP50R3####,	
		RGB Closed (Well) Type, Glass Filter (43%)	
		Pixel Format: 1920 horiz. By 1080 ver.	
4	Operating Environment	1) Temp. : 0 deg ~ 40 deg	LGE SPEC
		2) Humidity : 20 % ~ 80%	
5	Storage Environment	3) Temp. : -20 deg ~ 60 deg	
		4) Humidity : 10 % ~ 90 %	
6	Input Voltage	AC 100 V ~ 240 V, 50 / 60 Hz	Maker LG

Copyright ©2010 LG Electronics Inc. All rights reserved.
Only for training and service purposes

LGE Internal Use Only

■ Model General Specification

No	Item	Specification	Remarks
1	Market	Albania, Austria, Belgium, Bosnia, Bulgaria, Coratia, Czech, Denmark, Estonia, Finland, , France, Germany, Greece, Hungary, Ireland, Italy, Kazakhstan, Latvia, Lithuania, Luxembourg, Morocco, Netherlands, Norway, Poland, Portugal, Romania, Russia, Serbia, Slovenia, Spain, Sweden, Slovakia, Switzerland, Turkey, Ukraine, UK	36 Country
2	Broadcasting system	1) PAL/SECAM BG 2) PAL/SECAM DK 3) PAL Ⅰ/Ⅱ 4) SECAM L/L' 5) DVB T / T2 6) DVB C 7) DVB S	EU (PAL Market) Supporting T2 is only for **PZ***T./W Supporting S is only for **PZ***S/G
3	Receiving system	Analog : Upper Heterodyne Digital : COFDM	▶ DVB-T - Guard Interval(Bitrate_Mbit/s) - Guard Interval(Bitrate_Mbit/s) 1/4, 1/8, 1/16, 1/32 - Modulation : Code Rate QPSK : 1/2, 2/3, 3/4, 5/6, 7/8 16-QAM : 1/2, 2/3, 3/4, 5/6, 7/8 64-QAM : 1/2, 2/3, 3/4, 5/6, 7/8 ▶ DVB-C - Symbolrate : 4.0Msymbols/s to 7.2Msymbols/s - Modulation : 16QAM, 64-QAM, 128-QAM and 256- QAM ▶ DVB-S - symbolrate DVB-S2 (8PSK / QPSK) : 2 ~45Msymbol/s DVB-S (QPSK) : 2 ~ 45Msymbol/s - viterbi DVB-S mode : 1/2, 2/3, 3/4, 5/6, 7/8 DVB-S2 mode : 1/2, 2/3, 3/4, 3/5, 4/5, 5/6, 8/9, 9/10
4	Scart Jack (1EA)	PAL, SECAM	Scart 1 Jack is Full scart and support RF-OUT(Analog), MNT-OUT
5	Video Input (1EA)	PAL, SECAM, NTSC	Side AV
6	Component Input (1EA)	Y/Cb/Cr, Y/ Pb/Pr	
7	RGB Input	RGB-PC	Analog (D-Sub 15Pin)
8	HDMI Input (4EA)	HDMI-PC	HDMI/DTV,HDMI2, HDMI3, HDMI4 HDMI-DTV
9	Audio Input (3 EA)	RGB/DVI Audio, Component, AV	L/R Input
10	SPDIF Out(1 EA)	SPDIF Out	
11	USB(2EA)	For SVC, S/W Download, X-Studio, DivX	
12	Ethernet LAN		

Copyright ©2010 LG Electronics Inc. All rights reserved.
Only for training and service purposes

LGE Internal Use Only

ADJUSTMENT INSTRUCTION

1. Application Range

This spec sheet is applied to all of the PD12A chassis.

2. Specification

(1) Because this is not a hot chassis, it is not necessary to use an isolation transformer. However, the use of isolation transformer will help protect test instrument.
(2) Adjustment must be done in the correct order.
(3) The adjustment must be performed in the circumstance of 25 °C ± 5 °C of temperature and 65 % ± 10 % of relative humidity if there is no specific designation.
(4) The input voltage of the receiver must keep 100 V ~ 240 V, 50 / 60 Hz.
(5) The receiver must be operated for about 5 minutes prior to the adjustment when module is in the circumstance of over 15 °C
- In case of keeping module is in the circumstance of 0 °C, it should be placed in the circumstance of above 15 °C for 2 hours
- In case of keeping module is in the circumstance of below -20 °C, it should be placed in the circumstance of above 15 °C for 3 hours,.

● After RGB Full White in HEAT-RUN Mode, the receiver must be operated prior to the adjustment.
● Enter into HEAT-RUN MODE
1) Press the POWER ON KEY on R/C for adjustment.
2) OSD display and screen display PATTERN MODE.
- Set is activated HEAT run without signal generator in this mode.
- Single color pattern (WHITE) of HEAT RUN MODE uses to check panel.
- Caution : If you turn on a still screen more than 20 minutes (Especially digital pattern, cross hatch pattern), an after image may be occur in the black level part of the screen.

3. PCB assembly adjustment method

Caution: Using 'power on' button of the control R/C power on TV.

3-1. Download MAC Address, CI+ Key and widevine Key.

* Connect TV SET and PC which download keys Writing program by RS232C-Cable

(1) Start Program and Click 'start' Button to connect TV and PC.
(2) When download succeed, you can see "OK" on the screen.

* Each Chassis has it' own MAC Address. Please be careful of download.

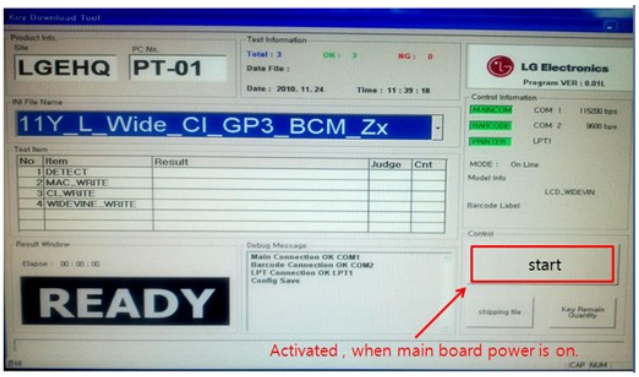

3-2. ADC Adjustment

● Auto-control adjustment protocol(RS-232C)

Order	Command	Set response
1. Inter the Adjustment mode	aa 00 00	a 00 OK00x
2. Change the Source	XB 00 40 XB 00 60	b 00 OK40x (Adjust 480i Comp1) (Adjust 1080p Comp1) b 00 OK60x (Adjust 1080p RGB)
3. Start Adjustment	ad 00 10	
4. Return the Response		OKx (Success condition) NGx (Failed condition)
5. Read data Adjustment data	(main) ad 00 20 (main) ad 00 30	(main : component1 480i, RGB 1080p) 00000000000000000000000007c007b006dx (main : component1 480i, RGB 1080p) 0000000700000000000000000007c00830077x
6. Confirm Adjustment	ad 00 99	NG 03 00x (Failed condition) NG 03 01x (Failed condition) NG 03 02x (Failed condition) OK 03 03x (Success condition)
7. End of Adjustment	ad 00 90	d 00 OK90x

(1) Adjustment of RGB
1) Convert to PC in Input-source.
2) Signal equipment displays
Output Voltage: 700 mVp-p
Impress Resolution FHD (1920 x 1080 @ 60Hz)
Model : 225 in Pattern Generator
Pattern : 65 in Pattern Generator
(MSPG-925 SERISE)

3) Adjust by commanding AUTO_COLOR_ADJUST

Copyright ©2010 LG Electronics Inc. All rights reserved.
Only for training and service purposes

LGE Internal Use Only

(2) COMPONENT input ADC

■ Convert to Component in Input-source.

■ Signal equipment displays

Impress Resolution 480i

MODEL: 209 in Pattern Generator(480i Mode)

PATTERN : 65 in Pattern Generator (MSPG-925 SERISE)

Impress Resolution 1080i

MODEL: 225 in Pattern Generator(1080P Mode)

PATTERN: 65 in Pattern Generator (MSPG-925 SERISE)

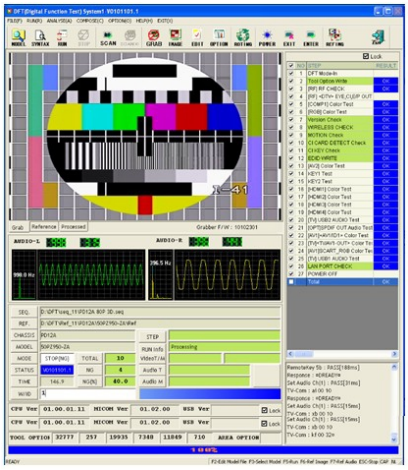

3-3. DFT Process.

* Depend on situation, Step can be changed.

No	STEP
1	DFT Mode-In
2	Tool Option Write
3	AREA Option Write
4	[RF]RF CHECK
5	[RF]<DTV>EYE
6	[COMP1]Color Test
7	[RGB]Color Test
8	Version Check
9	Wireless Check
10	Motion Check
11	CI Card detect Check
12	CI Key Check
13	EDID Write
14	[AV2]Color Test
15	KEY1 Test
16	KEY2 Test
17	[HDMI1]Color Test
18	[HDMI2]Color Test
19	[HDMI3]Color Test
20	[HDMI4]Color Test
21	[TV]USB2 Audio Test
22	SPDIF OUT Audio Test
23	[AV1]Color Test
24	[TV]<AV1-OUT>Color Test
25	[AV1]Scart_RGB Color Test
26	[TV]USB1 Audio Test
27	LAN Port Check
28	3D Check

3-4. Insert Tool OPTION and Model Name download.

(1) Press IN_START key on R/C to insert Tool OPTION

(2) On the " Tool Option ", Insert Tool Option by a number key

(3) Press the ENTER(■)

(4) Press ENTER(■) again.

(5) Select "OK to Download" by using ◄/►(VOL +/-) and press ►(VOL +)

Model Name		PZ950	PZ750	PZ570
Tool Option 1	50 INCH	32777	32793	32809
	60 INCH	32781	32797	32813
Tool Option 2	50 INCH	65	130	195
	60 INCH	65	130	195
Tool option 3		19807	19807	19743
Tool option 4		7348	7348	7348
Tool option 5		14921	14921	14920
Tool option 6		857	857	857

3-5. EDID(The Extended Display Identification Data) download

(1) Press the ADJ KEY on R/C and enter EZ ADJUST.

(2) Select "5.EDID D/L" by using ▲/▼(CH +/-) and press ENTER(■).

(3) Select "Start" and press navigation key(►).

(4) EDID download is executed automatically.

(5) Press EXIT key on R/C

* Caution

- Never connect HDMI & D-sub Cable when the user download EDID .

Copyright ©2010 LG Electronics Inc. All rights reserved.
Only for training and service purposes

LGE Internal Use Only

* EDID DATA

(1) RGB

	0	1	2	3	4	5	6	7	8	9	A	B	C	D	E	F
00	00	FF	FF	FF	FF	FF	FF	00	1E	6D	01	00	01	01	01	01
10	01	15	01	03	68	10	09	78	0A	EE	91	A3	54	4C	99	26
20	0F	50	54	A1	08	00	01	01	81	C0	81	00	81	80	95	00
30	90	40	A9	C0	B3	00	02	3A	80	18	71	38	2D	40	58	2C
40	45	00	A0	5A	00	00	00	1E	66	21	50	B0	51	00	1B	30
50	40	70	36	00	A0	5A	00	00	00	1E	00	00	00	FD	00	3A
60	3E	1E	53	10	00	0A	20	20	20	20	20	20	00	00	00	FC
70	00	4C	47	20	54	56	0A	20	20	20	20	20	20	20	00	47

: Model Name

(2) HDMI

	0	1	2	3	4	5	6	7	8	9	A	B	C	D	E	F
00	00	FF	FF	FF	FF	FF	FF	00	1E	6D	01	00	01	01	01	01
10	01	15	01	03	80	10	09	78	0A	EE	91	A3	54	4C	99	26
20	0F	50	54	A1	08	00	71	40	81	C0	81	00	81	80	95	00
30	90	40	A9	C0	B3	00	02	3A	80	18	71	38	2D	40	58	2C
40	45	00	A0	5A	00	00	00	1E	66	21	50	B0	51	00	1B	30
50	40	70	36	00	A0	5A	00	00	00	1E	00	00	00	FD	00	39
60	3F	1F	52	10	00	0A	20	20	20	20	20	20	00	00	00	FC
70	00	4C	47	20	54	56	0A	20	20	20	20	20	20	20	01	7F
00	02	03	38	F1	4F	02	03	11	12	13	84	15	16	05	14	10
10	1F	22	20	01	26	15	07	50	09	57	07	78	03	0C	00	10
20	00	B8	2D	20	C0	0E	01	40	3F	30	D8	10	98	10	88	10
30	48	10	58	10	E3	05	03	01	1A	36	80	A0	70	38	1F	40
40	30	20	35	00	40	84	63	00	00	1A	01	1D	80	18	71	1C
50	16	20	58	2C	25	00	40	84	63	00	00	9E	01	1D	00	72
60	51	D0	1E	20	6E	28	55	00	40	84	63	00	00	1E	00	00
70	00	00	00	00	00	00	00	00	00	00	00	00	00	00	00	E4

: Model Name

3-6. Confirmation

(1) Press 'InStart' Key on Factory SVC Remote Controller. And MUST check ADC & EDID ADJ status is OK.

4. SET assembly adjustment method

* Caution : Each PCB assembly must be checked by check JIG set. (Because power PCB Assembly damages to PDP Module, especially be careful)

4-1.POWER PCB Assembly Voltage adjustment (Va/Vs Voltage Adjustment)

Test equipment : D.M.M 1EA
Connection Diagram for Measuring : refer to fig.4
Adjustment method

(1) Va adjustment
  1) Connect + terminal of D. M.M. to Va pin of P811, connect -terminal to GND pin of P811.
  2) After turning VR901,voltage of D.M.M adjustment as same as Va voltage which on label of panel right/top (deviation; ±0.5V)
(2) Vs adjustment
  1) Connect + terminal of D. M..M. to Vs pin of P811, connect -terminal to GND pin of P811.
  2) After turning VR951, voltage of D.M.M adjustment as same as Vs voltage which on label of panel right/top (deviation ; ±0.5V)

4-2. Download Serial number (RS-232C)

■ Press "Power on" key of service R/C. (Baud rate : 115200 bps)
■ Connect RS232 Signal Cable to RS-232 Jack.
■ Write Serial number by use RS-232.
■ Must check the serial number at the Diagnostics of SET UP menu. (Refer to below '6.SET INFORMATION').

4-3. Adjustment of White Balance

Required Equipment
- Remote controller for adjustment
- Color Analyzer (CS-1000, CA-100,100+,CA-210 or same produc: CH 10 (PDP)
  * Please adjust CA-210, CA-100+ by CS-1000 before measuring
- Auto W/B adjustment instrument(only for Auto adjustment)
- 9 Pin D-Sub Jack(RS232C) is connected to the AUTO W/B EQUIPMENT.

Before Adjust of White Balance, Please press POWER ONLY key

Adjust Process will start by execute RS232C Command.
- Color temperature standards according to CSM and Module

CSM	PLASMA
Cool	11000K
Medium	9300K
Warm	6500K

- CS-1000/CA-100+/CA-210(CH 10) White balance adjustment coordinates and color temperature.

CSM	Color Coordinate		Temp	±Color Coordinate
	x	y		
Cool	0.276	0.283	11000K	0.002
Medium	0.285	0.293	9300K	0.002
Warm	0.313	0.329	6500K	0.002

* Manual W/B process (using adjusts Remote control)
  Please Adjust in AV 1 MODE, Turn off Energy Saving Mode.
(1) Enter 'PICTURE RESET' on Picture Mode, then turn off Fresh Contrast and Fresh colour in Advanced Control
(2) After enter Service Mode by pushing "ADJ" key,
(3) Enter White Pattern off of service mode, and change off -> on.
(4) Enter "W/B ADJUST" by pushing "►" key at "3. W/B ADJUST".

* Gain Max Value is 192. So, Never make any Gain Value over 192 and please fix one Value on 192, between R, G and B.

	Min	Tpy	Max
R-GAIN	0	192	192
G-GAIN	0	192	192
B-GAIN	0	192	192

Copyright ©2010 LG Electronics Inc. All rights reserved.
Only for training and service purposes

LGE Internal Use Only

* Auto-control interface and directions
  (1) Adjust in the place where the influx of light like floodlight around is blocked. (Illumination is less than 10ux).
  (2) Measure and adjust after sticking the Color Analyzer (CA-100+, CA210) to the side of the module.
  (3) Aging time
  After aging start, keep the Power on (no suspension of power supply) and heat-run over 5 minutes

4-4. Serial number download & Model name D/L and Check Tool Option.

(1) Press "Power on" button of a service R/C.(Baud rate : 115200 bps)
(2) Connect RS232-C Signal Cable and start 'Option Check Program Ver3.8'
(3) Scan serial Number and press 'F5' button.
(4) Check 'OK' on program (1) program.
(5) Press 'In start' button on SVC R/C, check Serial Number and Model Name.

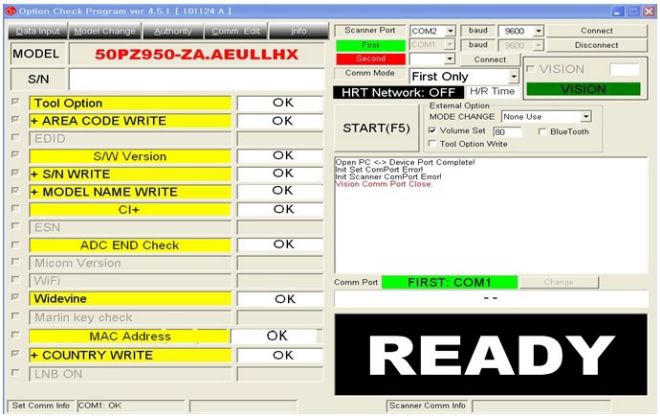

4-5. Check Tool Option and write Country Group & Area Code(Option) D/L

Model Name		PZ950	PZ750	PZ570
Tool Option 1	50 INCH	32777	32793	32809
	60 INCH	32781	32797	32813
Tool Option 2	50 INCH	65	130	195
	60 INCH	65	130	195
Tool option 3		19807	19807	19743
Tool option 4		7348	7348	7348
Tool option 5		14921	14921	14920
Tool option 6		857	857	857
Area option / Code		0	0	0

4-6. Checking the EYE-Q Operation.

(1) Press the EYE Key on the adjustment remote controller.
(2) Check the Sensor DATA (It must be under 10) and keep the data longer than 1.5s
(3) Check 'OK'

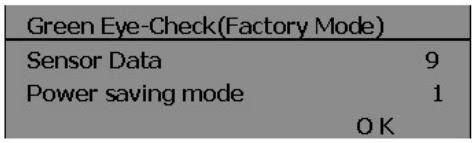

(Sensor DATA 0 ~ 4095, Power Saving Mode 0 ~ 12)
* IF you press IN-STAP Button, change Green Eye-check OSD.

4-7. Ping TEST

* This test is to check Network operation.

Connect: SET-> LAN Port == PC-> LAN Port

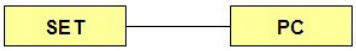

(1) Equipment Setting
  1) Play the LAN Port Test PROGRAM.
  2) Input IP set up for an inspection to Test
     *IP Number : 12.12.2.2

(2) LAN PORT inspection (PING TEST)
  * In this case Network setting is on Manual Setting.
  1) Play the LAN Port Test Program.
  2) connect each other LAN Port Jack.
  3) Play Test (F9) button and confirm OK Message.
  4) remove LAN CABLE

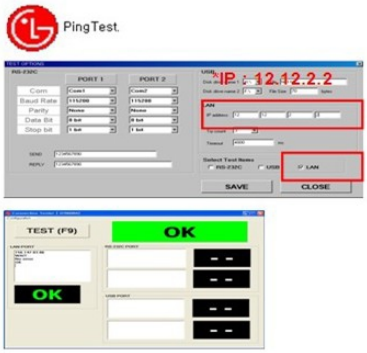

(3) Check Wireless function.
  1) Connect set and Dongle of Wireless to Cable of HDMI & TTA 20Pin
  2) At OSD of SET, check the message like Fig 3.
  3) Detach Cable of Wireless Dongle

Fig.1 .. Fig.2 ..

Fig.3 Connect the Dongle ..

Copyright ©2010 LG Electronics Inc. All rights reserved.
Only for training and service purposes

LGE Internal Use Only

4-8. Magic Motion Remote Controller test

Required Equipment

- RF Remote Controller for test, IR-KEY-Code Remote Controller for test

* You must confirm the battery power of Remote Controller before test
  (Recommend that change the battery per every lot)

(1) If you select the 'start key(Mute)' on the controller, you can pairing with the TV SET.
(2) You can check the cursor on the TV Screen, when select the 'OK Key' on the controller
(3) You must remove the pairing with the TV Set by select 'Vol+(STOP) Key' on the controller

4-9. 3D Function Test

Required Equipment

● Pattern Generator : MSHG-600, MSPG-6100 [SUPPORT HDMI1.4])
MODE : HDMI mode NO. 872
Pattern No.83

(1) Please input 3D test pattern like below (HDMI mode NO. 872 , pattern No.83)

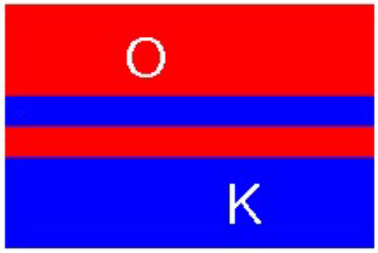

(2) When 3D OSD appear automatically, then press OK button on ADJ Remote Controller.
(3) Check the picture. The picture must be same as below.
(Don't have to wear 3D glasses.)

4-10. Check RF Emitter.

Required Equipment

- Pattern Generator : 3D-GT002, MSHG-600, MSPG-6100 [SUPPORT HDMI1.4])
MODE : HDMI mode NO. 872
Pattern No.83

(1) On 3D Mode, Check the picture like below.

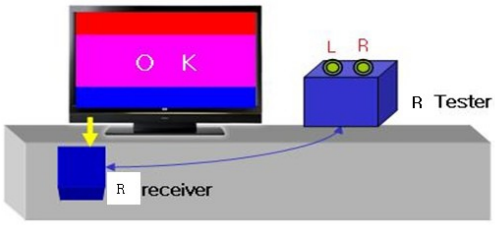

(2) If RF Emitter is correctly working, you can see that the lamp of RF tester turns on.

RF Tester Lamp turned off (NG)

RF Tester Lamp turned on (OK)

5. Set Information (Serial No & Model name)

5-1. Check the serial number & Model Name

(1) Push the menu button in DTV mode.
(2) Check the Serial Number
Select the STATION -> Diagnostics -> To set

6. SW Download Guide.

* Put a *.bin to USB Stick and Turn on TV

(1) Put the USB Stick to the USB socket
(2) Automatically detecting update file in USB Stick
  * If your downloaded program version in USB Stick is Low, it didn't work.
  But your downloaded version is High, USB data is automatically detecting.
(3) Show the message "Copying files from memory"
(4) Updating is staring.
(5) Updating Completed, The TV will restart automatically.
After turn on TV, Please press 'IN-STOP' button on ADJ Remote-control.
  * IF you don't have ADJ R/C, enter 'Factory Reset' in OPTION MENU.
(6) When TV turn on, check the Updated version on Diagnostics MENU.

Copyright ©2010 LG Electronics Inc. All rights reserved.
Only for training and service purposes

LGE Internal Use Only

BLOCK DIAGRAM

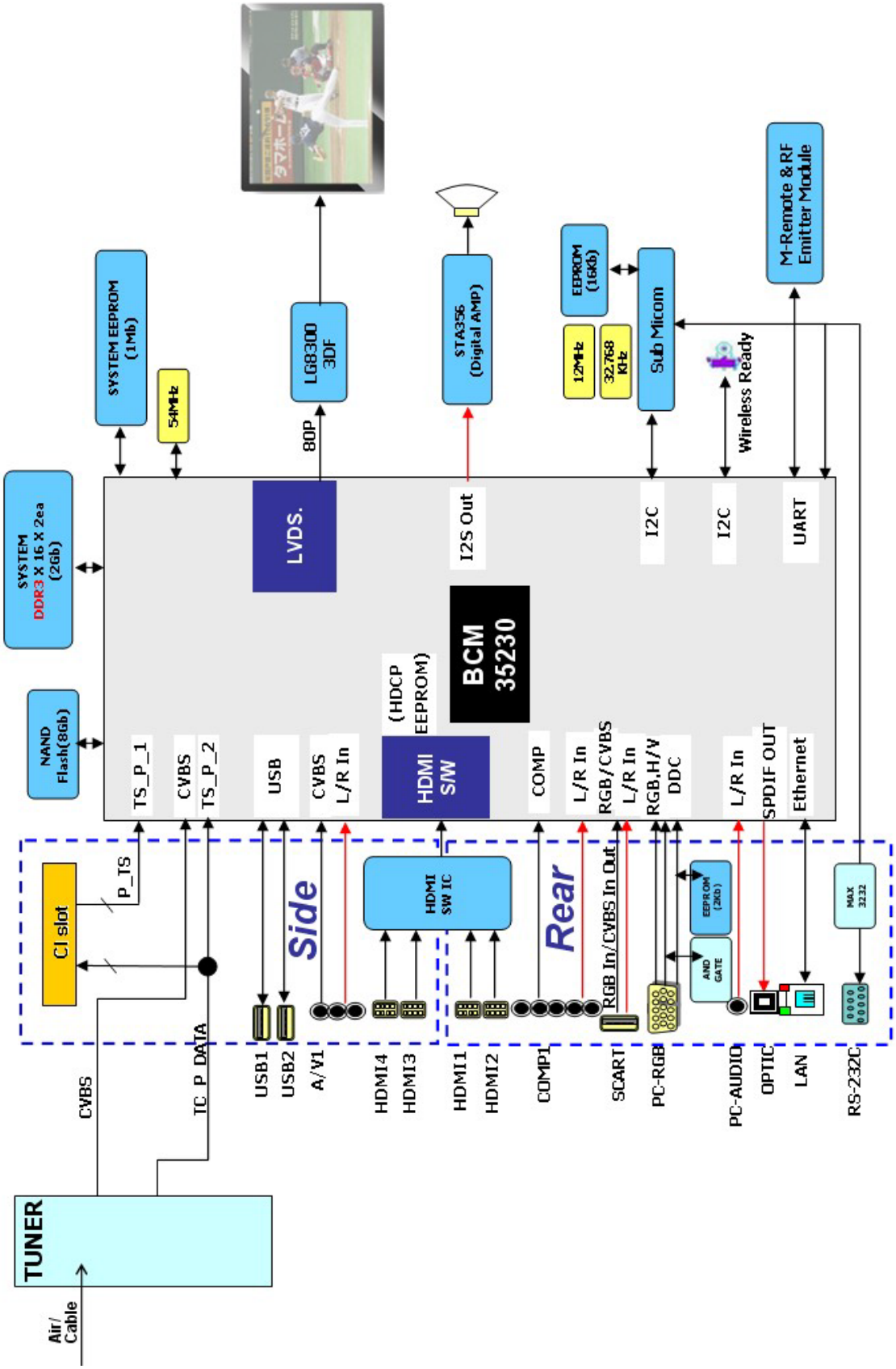

Copyright ©2010 LG Electronics Inc. All rights reserved.
Only for training and service purposes

LGE Internal Use Only

EXPLODED VIEW

IMPORTANT SAFETY NOTICE

Many electrical and mechanical parts in this chassis have special safety-related characteristics. These parts are identified by ⚠ in the Schematic Diagram and EXPLODED VIEW.
It is essential that these special safety parts should be replaced with the same components as recommended in this manual to prevent X-RADIATION, Shock, Fire, or other Hazards.
Do not modify the original design without permission of manufacturer.

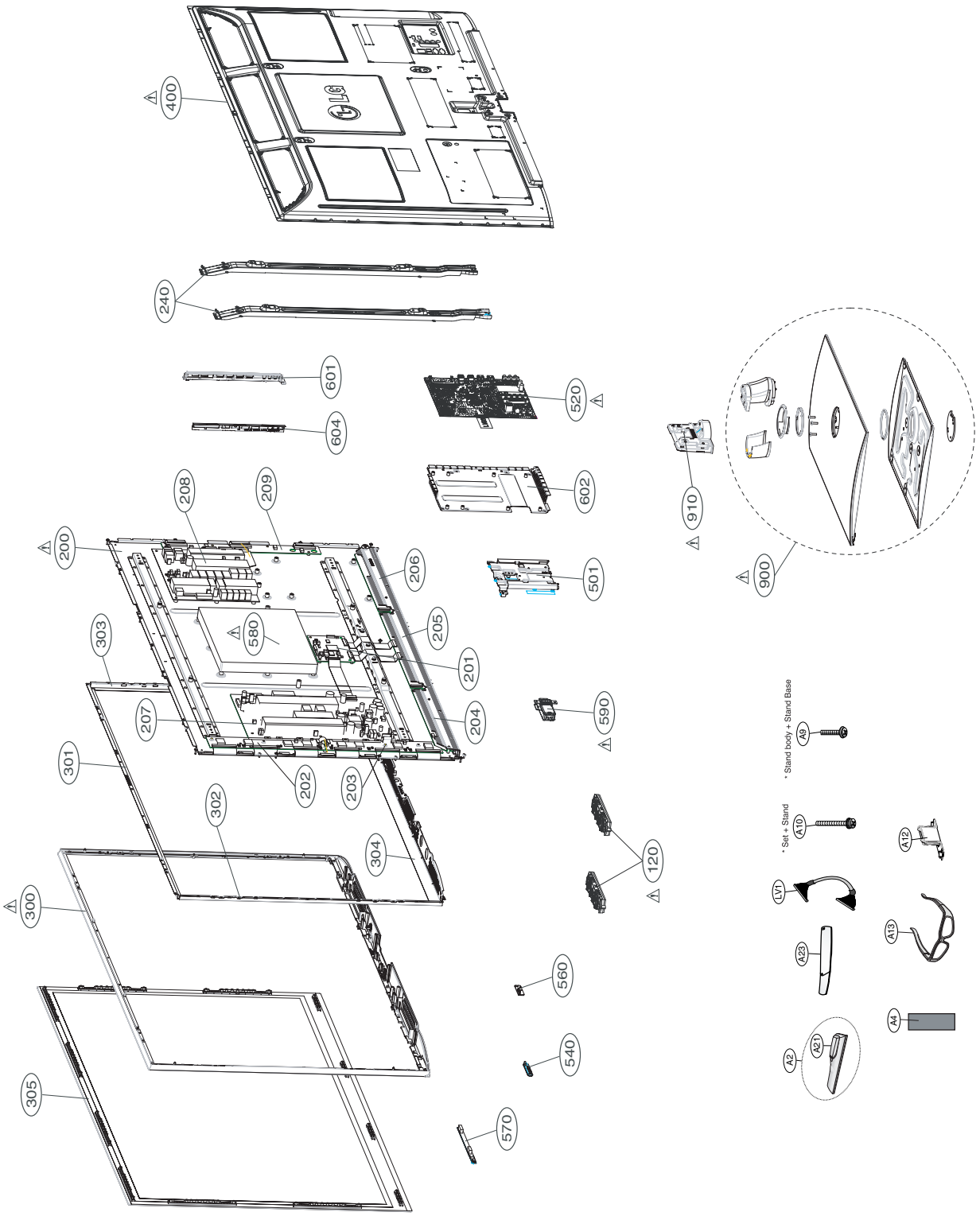

Copyright ©2010 LG Electronics Inc. All rights reserved.
Only for training and service purposes

LGE Internal Use Only

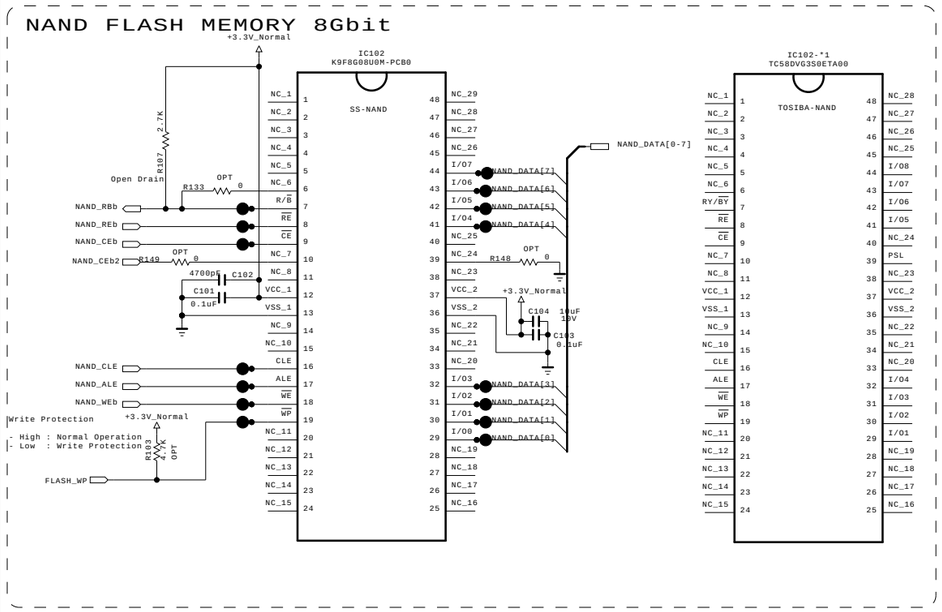

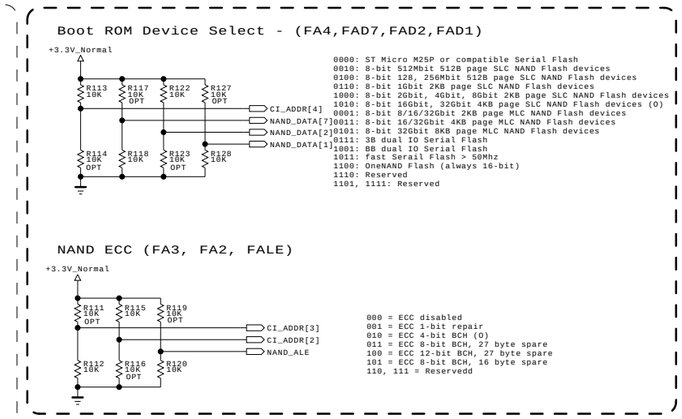

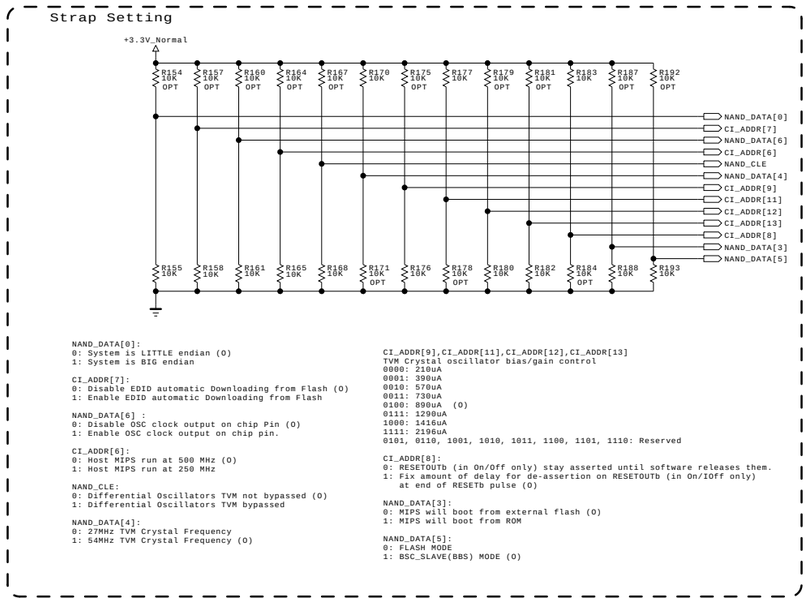

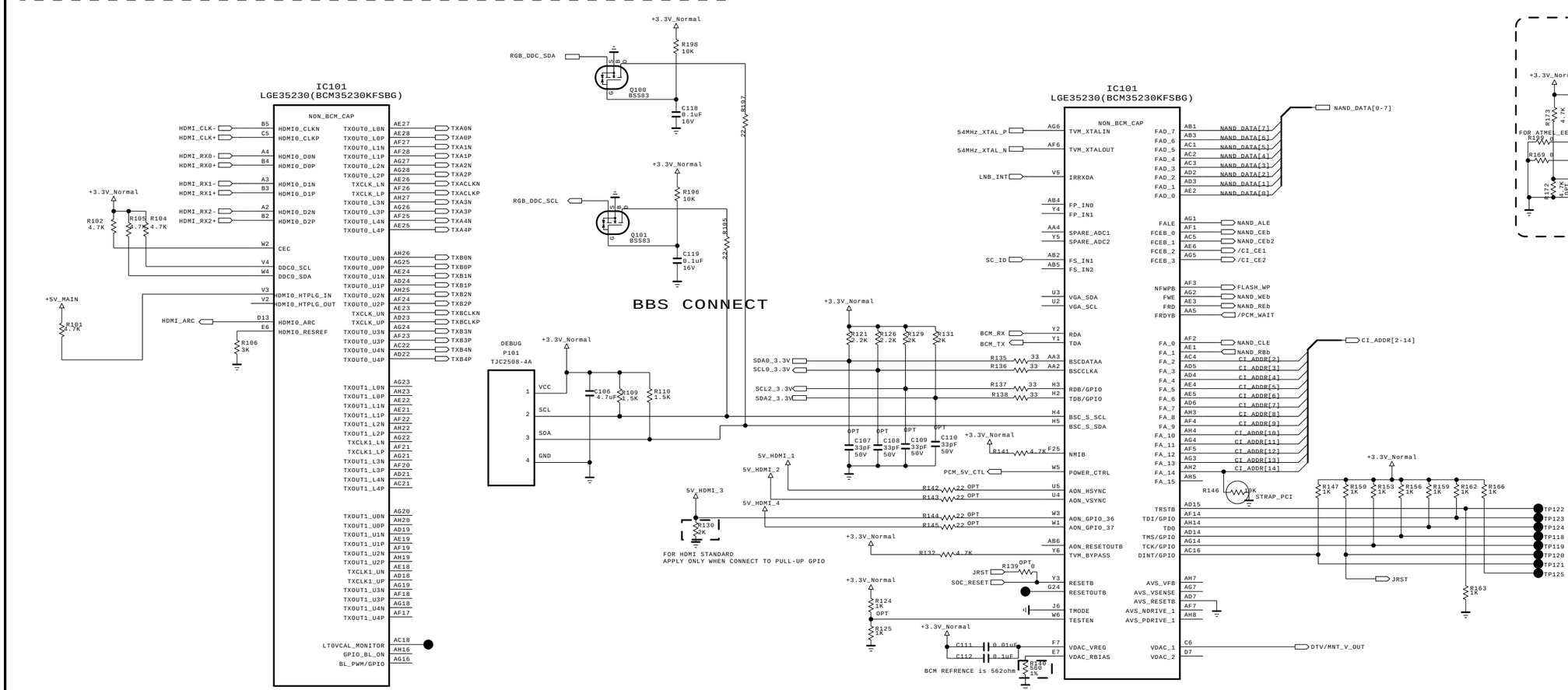

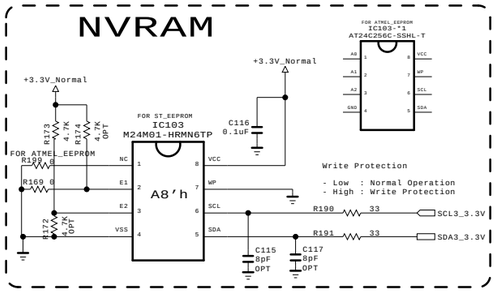

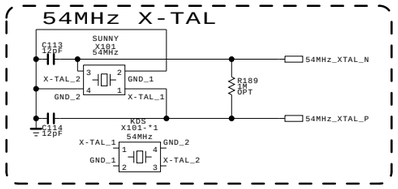

THE ⚠ SYMBOL MARK OF THIS SCHEMETIC DIAGRAM INCORPORATES SPECIAL FEATURES IMPORTANT FOR PROTECTION FROM X-RADIATION. FILRE AND ELECTRICAL SHOCK HAZARDS, WHEN SERVICING IF IS ESSENTIAL THAT ONLY MANUFATURES SPECFIED PARTS BE USED FOR THE CRITICAL COMPONENTS IN THE ⚠ SYMBOL MARK OF THE SCHEMETIC.

SECRET
LGElectronics

LG ELECTRONICS

MODEL	EAX63525101	DATE	
BLOCK	MAIN & NAND FLASH	SHEET	1 / 19

Copyright © 2010 LG Electronics Inc. All rights reserved.
Only for training and service purposes

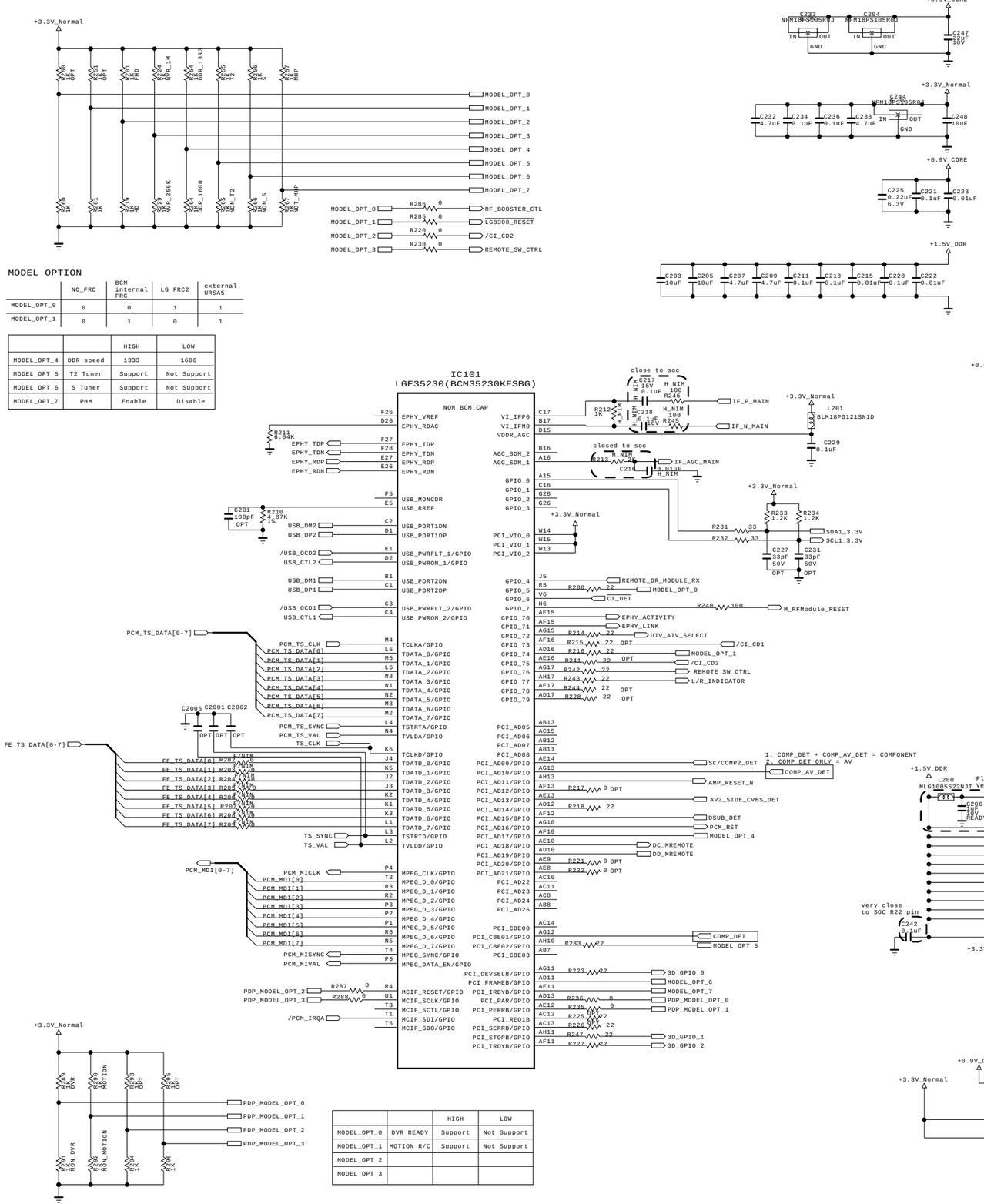

MODEL OPTION

	NO_FRC	BCM internal FRC	LG FRC2	external URSA5
MODEL_OPT_0	0	0	1	1
MODEL_OPT_1	0	1	0	1

		HIGH	LOW
MODEL_OPT_4	DDR speed	1333	1600
MODEL_OPT_5	T2 Tuner	Support	Not Support
MODEL_OPT_6	S Tuner	Support	Not Support
MODEL_OPT_7	PHM	Enable	Disable

		HIGH	LOW
MODEL_OPT_0	DVR READY	Support	Not Support
MODEL_OPT_1	MOTION R/C	Support	Not Support
MODEL_OPT_2			
MODEL_OPT_3			

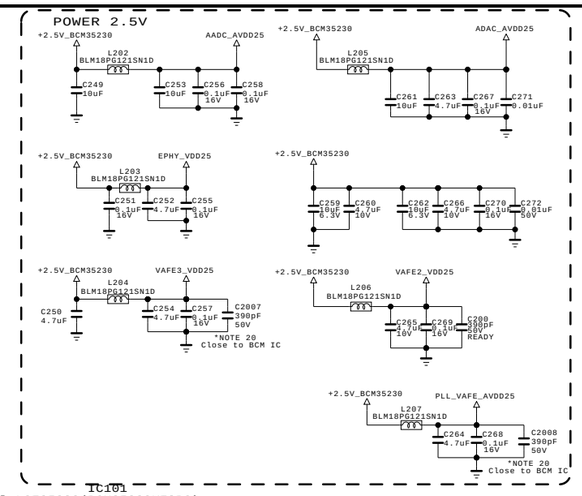

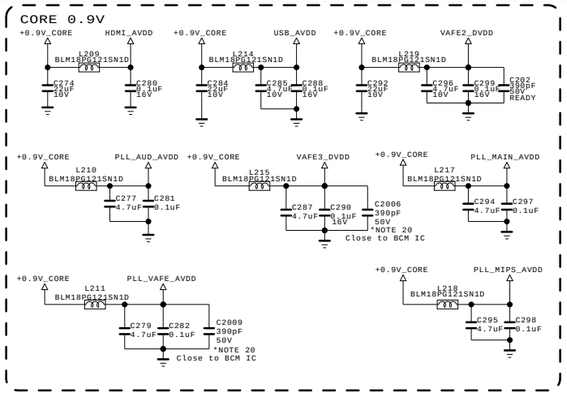

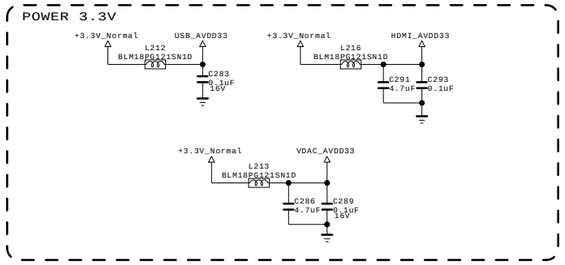

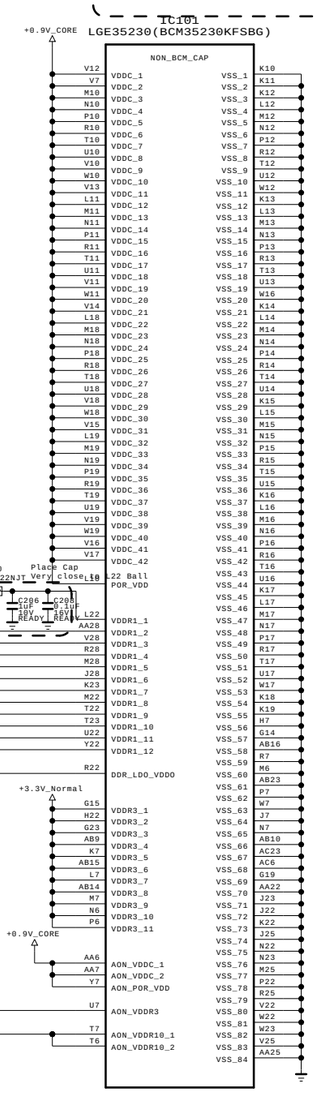

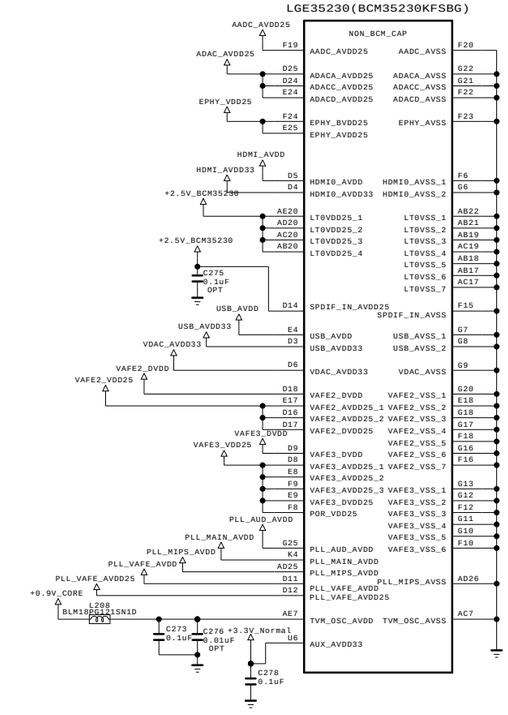

THE ⚠ SYMBOL MARK OF THIS SCHEMETIC DIAGRAM INCORPORATES SPECIAL FEATURES IMPORTANT FOR PROTECTION FROM X-RADIATION. FILRE AND ELECTRICAL SHOCK HAZARDS, WHEN SERVICING IF IS ESSENTIAL THAT ONLY MANUFATURES SPECFIED PARTS BE USED FOR THE CRITICAL COMPONENTS IN THE ⚠ SYMBOL MARK OF THE SCHEMETIC.

SECRET
LGElectronics

LG ELECTRONICS

MODEL	EAX63525101	DATE	
BLOCK	MAIN POWER	SHEET	2 / 19

Copyright © 2010 LG Electronics Inc. All rights reserved.
Only for training and service purposes

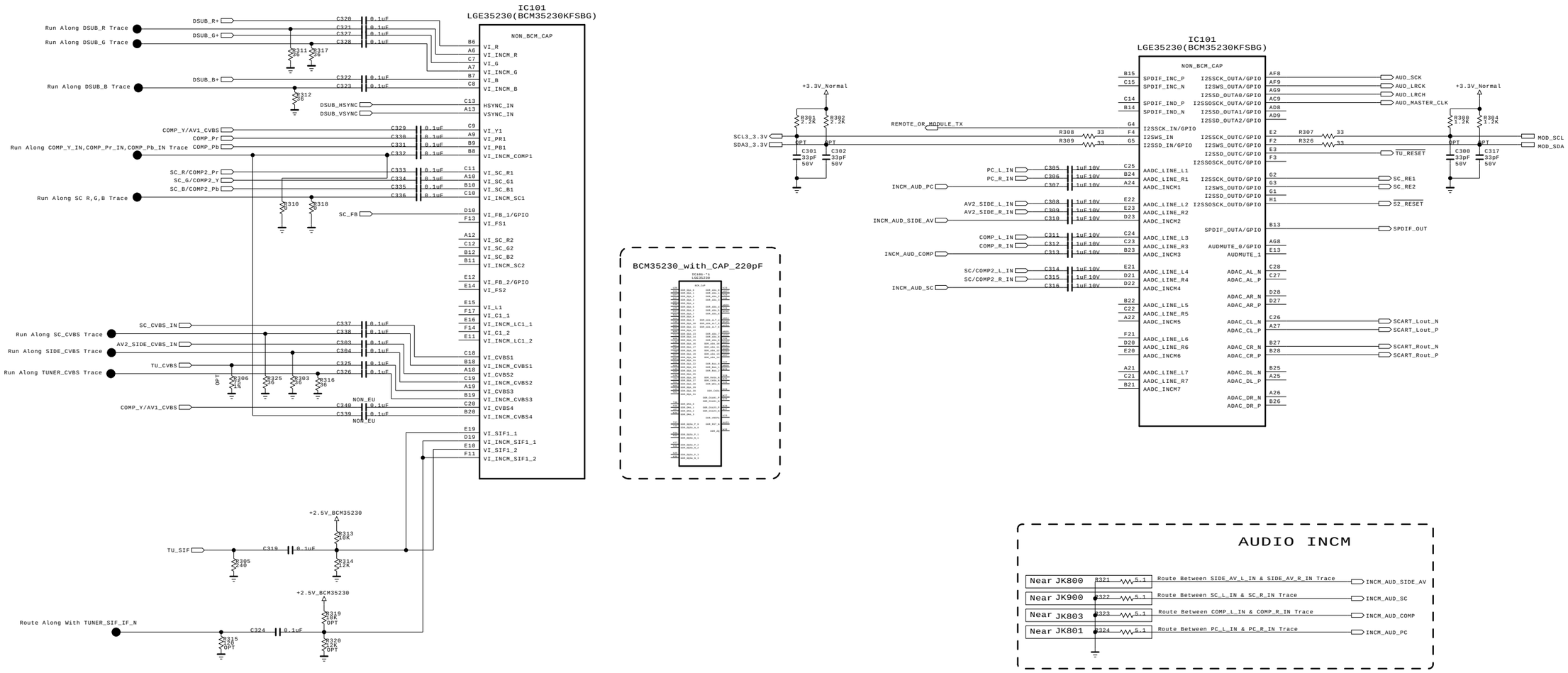

THE ⚠ SYMBOL MARK OF THIS SCHEMETIC DIAGRAM INCORPORATES SPECIAL FEATURES IMPORTANT FOR PROTECTION FROM X-RADIATION. FILRE AND ELECTRICAL SHOCK HAZARDS, WHEN SERVICING IF IS ESSENTIAL THAT ONLY MANUFATURES SPECFIED PARTS BE USED FOR THE CRITICAL COMPONENTS IN THE ⚠ SYMBOL MARK OF THE SCHEMETIC.

SECRET
LGElectronics

LG ELECTRONICS

MODEL	EAX63525101	DATE	
BLOCK	MAIN AUDIO/VIDEO	SHEET	3 / 19

Copyright © 2010 LG Electronics Inc. All rights reserved.
Only for training and service purposes

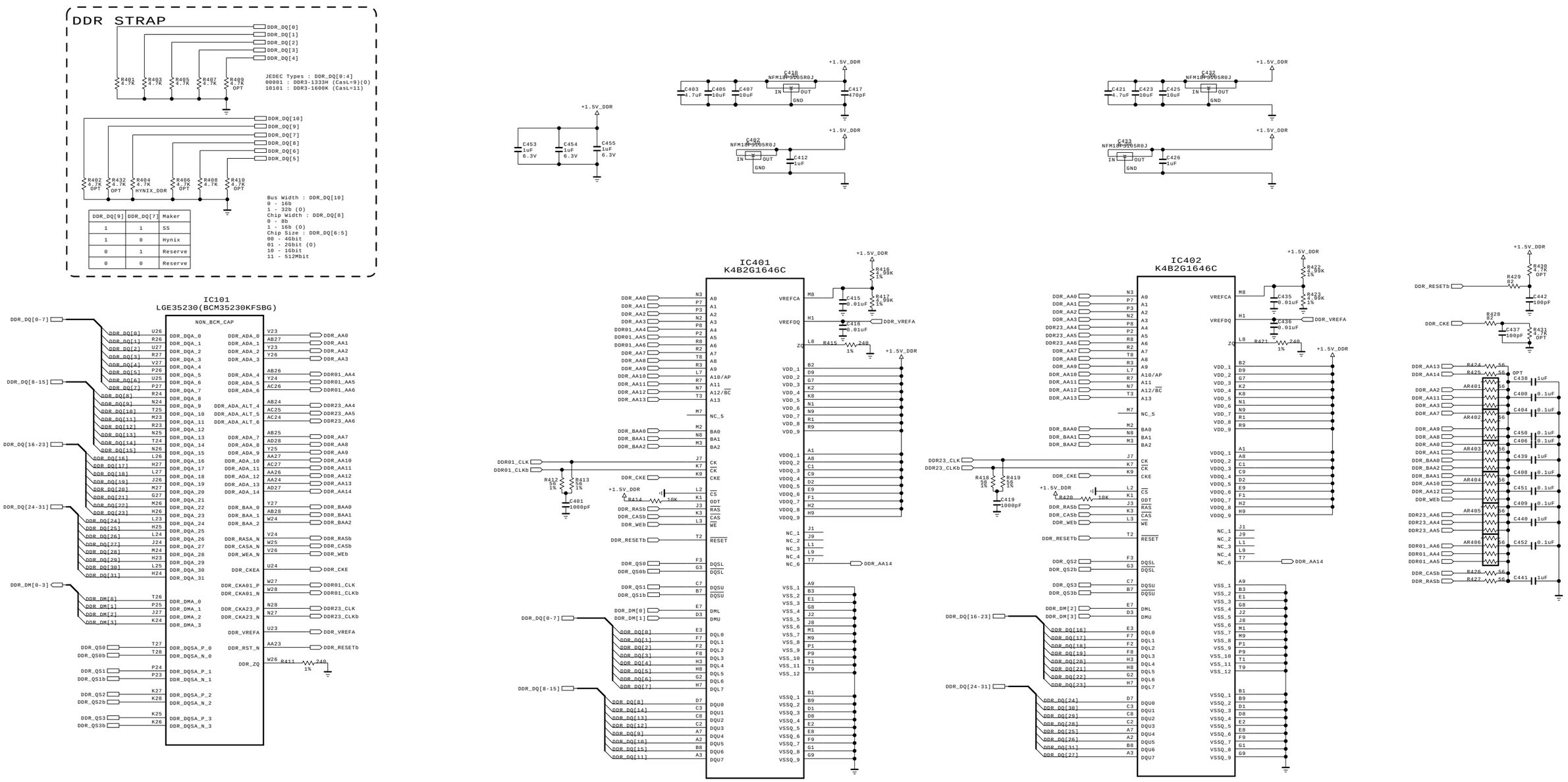

DDR_DQ[9]	DDR_DQ[7]	Maker
1	1	SS
1	0	Hynix
0	1	Reserve
0	0	Reserve

THE ⚠ SYMBOL MARK OF THIS SCHEMETIC DIAGRAM INCORPORATES SPECIAL FEATURES IMPORTANT FOR PROTECTION FROM X-RADIATION. FILRE AND ELECTRICAL SHOCK HAZARDS, WHEN SERVICING IF IS ESSENTIAL THAT ONLY MANUFATURES SPECFIED PARTS BE USED FOR THE CRITICAL COMPONENTS IN THE ⚠ SYMBOL MARK OF THE SCHEMETIC.

SECRET

LGElectronics

LG ELECTRONICS

MODEL	EAX63525101	DATE	
BLOCK	MAIN DDR	SHEET	4 / 19

Copyright © 2010 LG Electronics Inc. All rights reserved.
Only for training and service purposes

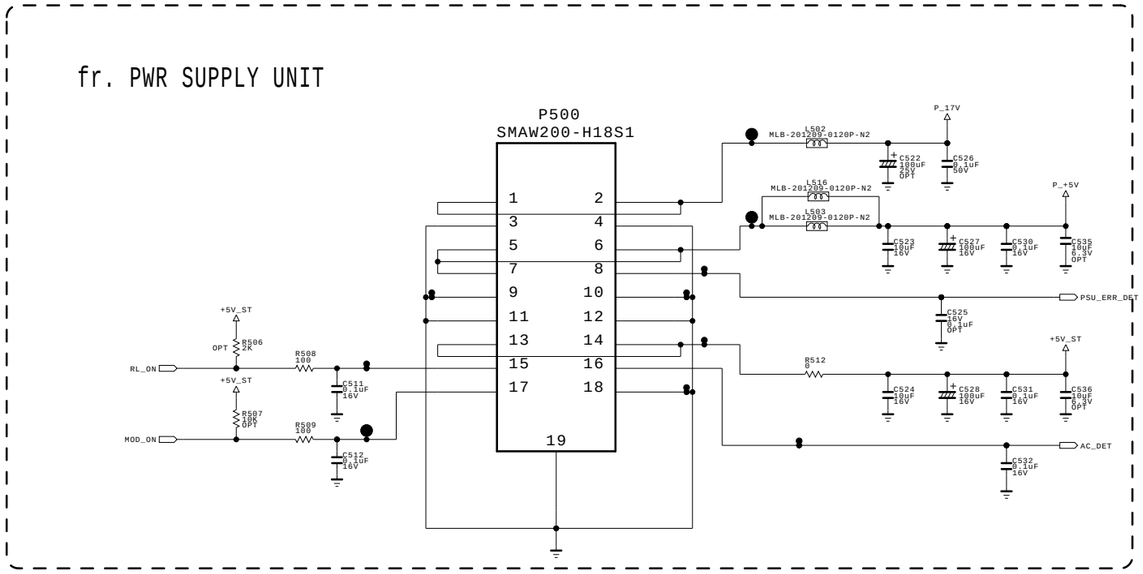

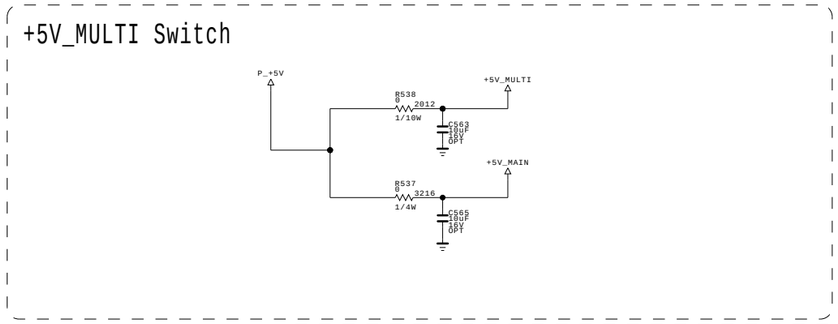

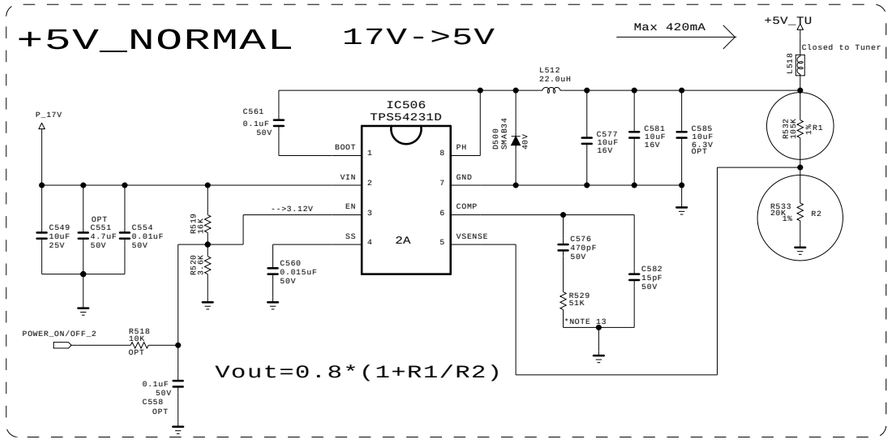

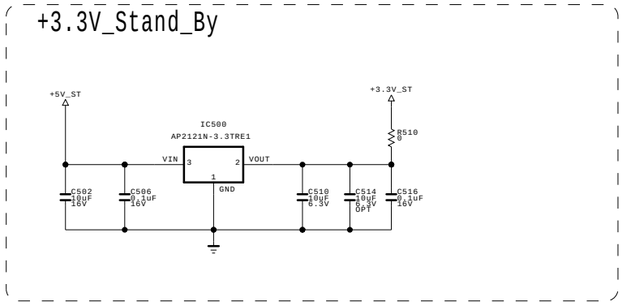

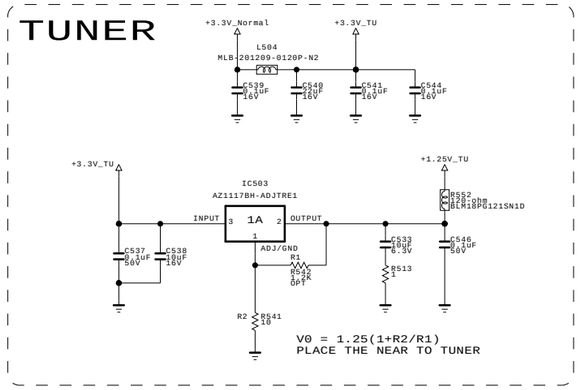

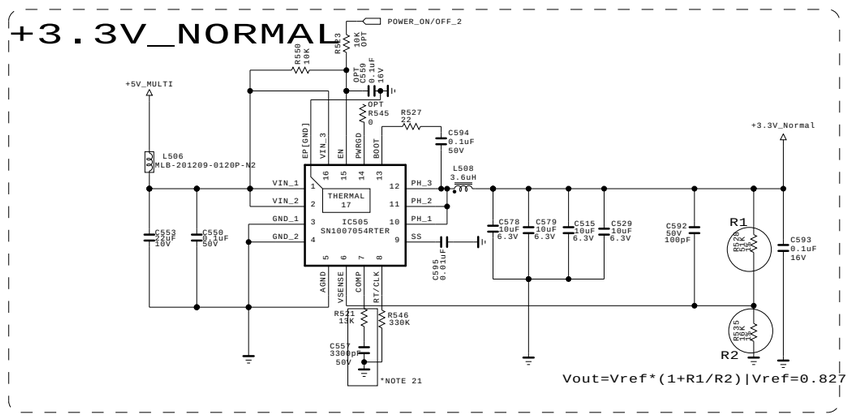

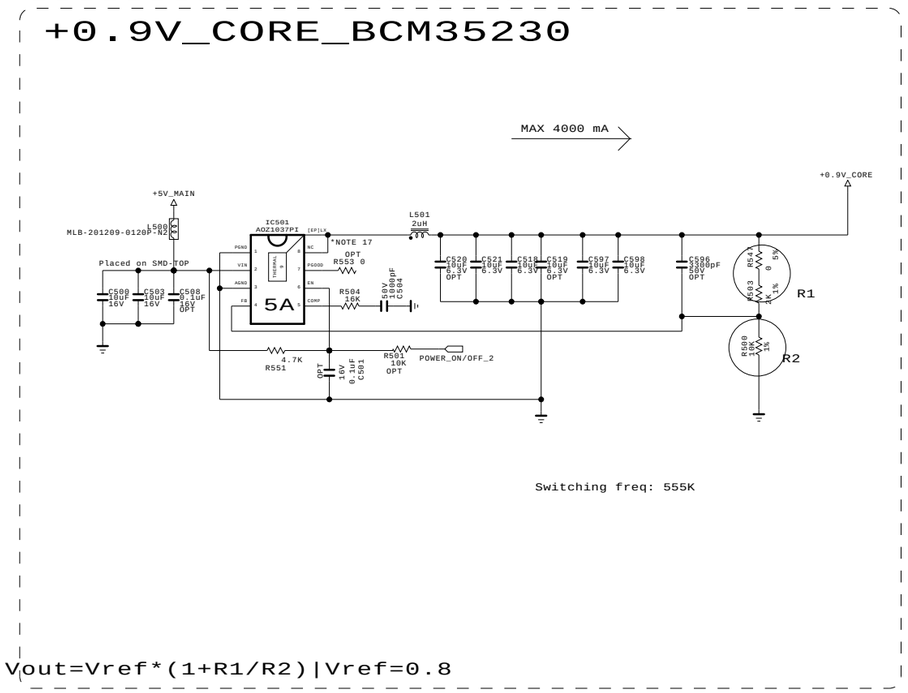

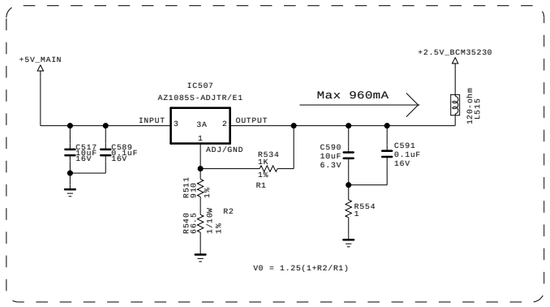

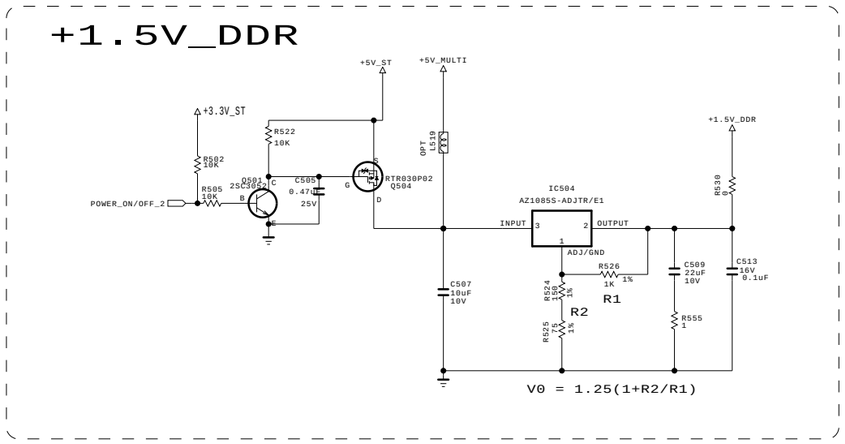

THE ⚠ SYMBOL MARK OF THIS SCHEMETIC DIAGRAM INCORPORATES SPECIAL FEATURES IMPORTANT FOR PROTECTION FROM X-RADIATION. FILRE AND ELECTRICAL SHOCK HAZARDS, WHEN SERVICING IF IS ESSENTIAL THAT ONLY MANUFATURES SPECFIED PARTS BE USED FOR THE CRITICAL COMPONENTS IN THE ⚠ SYMBOL MARK OF THE SCHEMETIC.

SECRET
LGElectronics

LG ELECTRONICS

MODEL	EAX63525101	DATE	
BLOCK	POWER	SHEET	5 / 19

Copyright © 2010 LG Electronics Inc. All rights reserved.
Only for training and service purposes

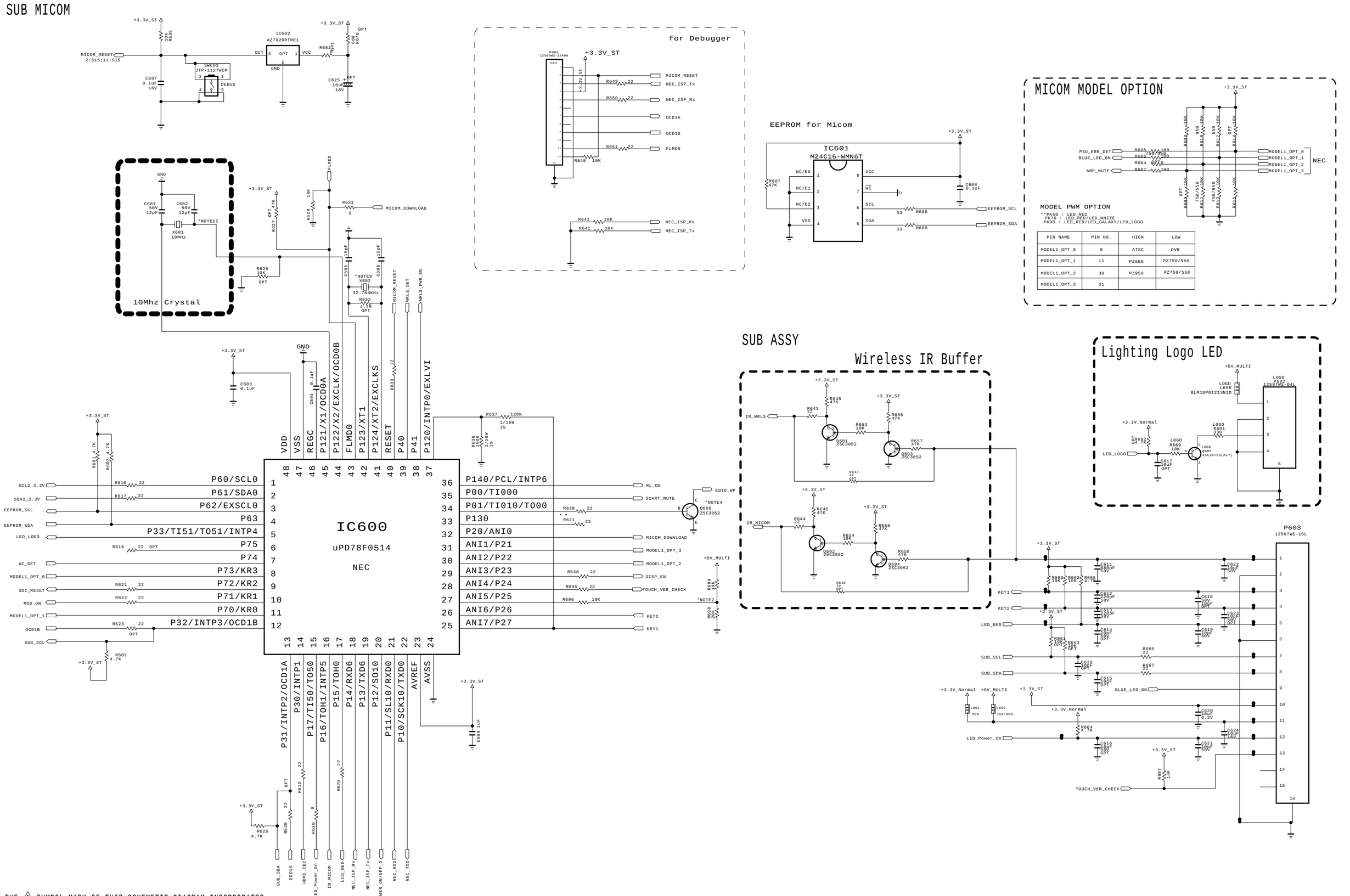

PIN NAME	PIN NO.	HIGH	LOW
MODEL1_OPT_0	8	ATSC	DVB
MODEL1_OPT_1	11	PZ550	PZ750/950
MODEL1_OPT_2	30	PZ950	PZ750/550
MODEL1_OPT_3	31		

THE ⚠ SYMBOL MARK OF THIS SCHEMETIC DIAGRAM INCORPORATES SPECIAL FEATURES IMPORTANT FOR PROTECTION FROM X-RADIATION. FIRE AND ELECTRICAL SHOCK HAZARDS, WHEN SERVICING IF IS ESSENTIAL THAT ONLY MANUFATURES SPECFIED PARTS BE USED FOR THE CRITICAL COMPONENTS IN THE ⚠ SYMBOL MARK OF THE SCHEMETIC.

SECRET

LGElectronics

LG ELECTRONICS

MODEL	EAX63525101	DATE	
BLOCK	MICOM/IR	SHEET	6 / 19

Copyright © 2010 LG Electronics Inc. All rights reserved.
Only for training and service purposes

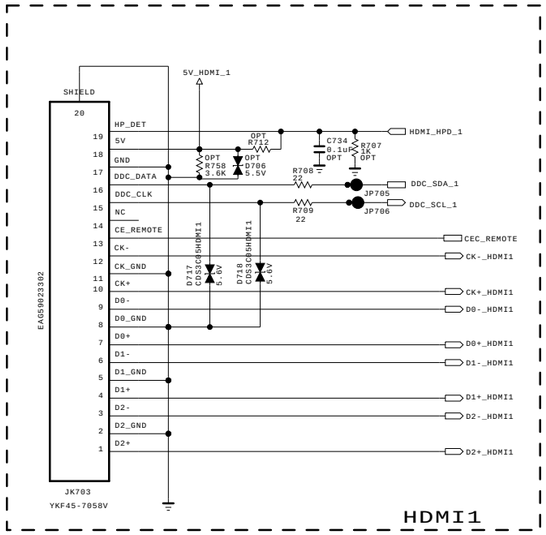

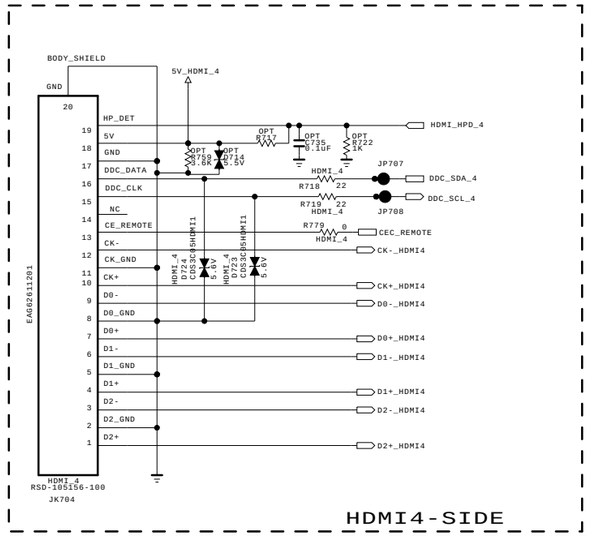

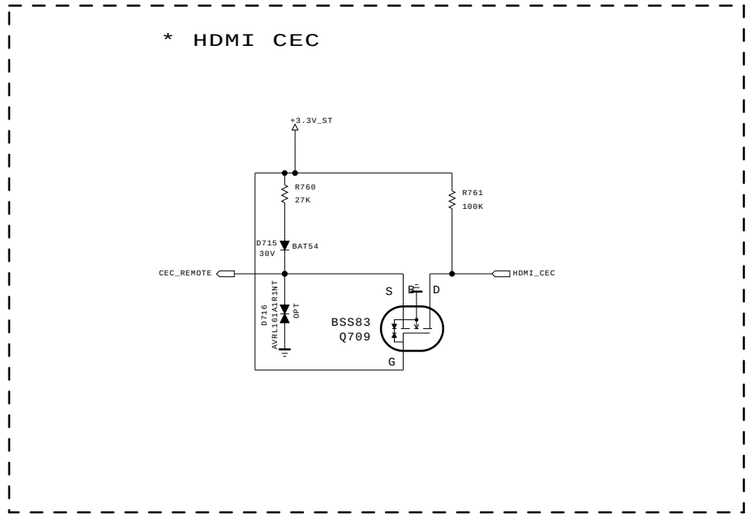

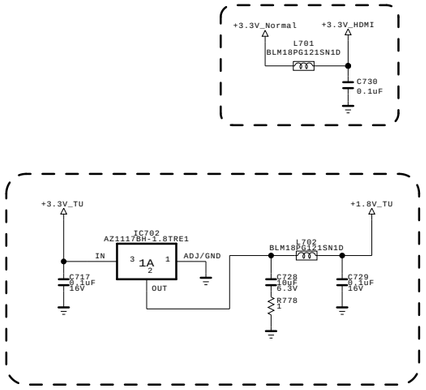

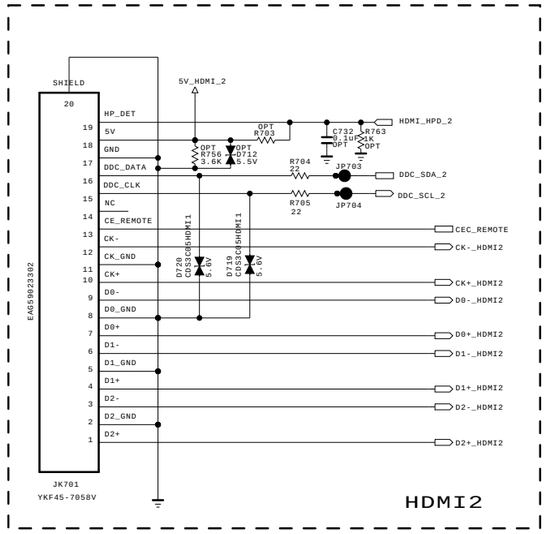

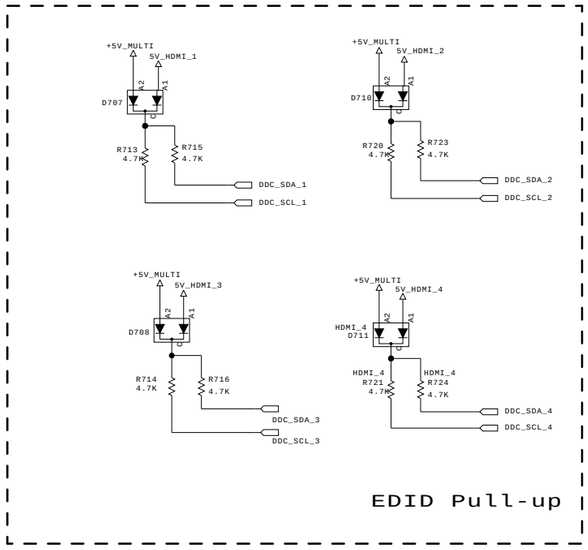

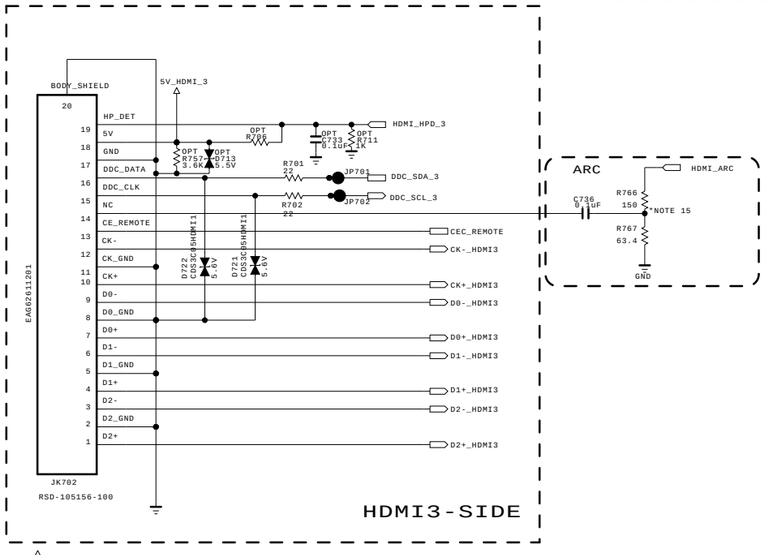

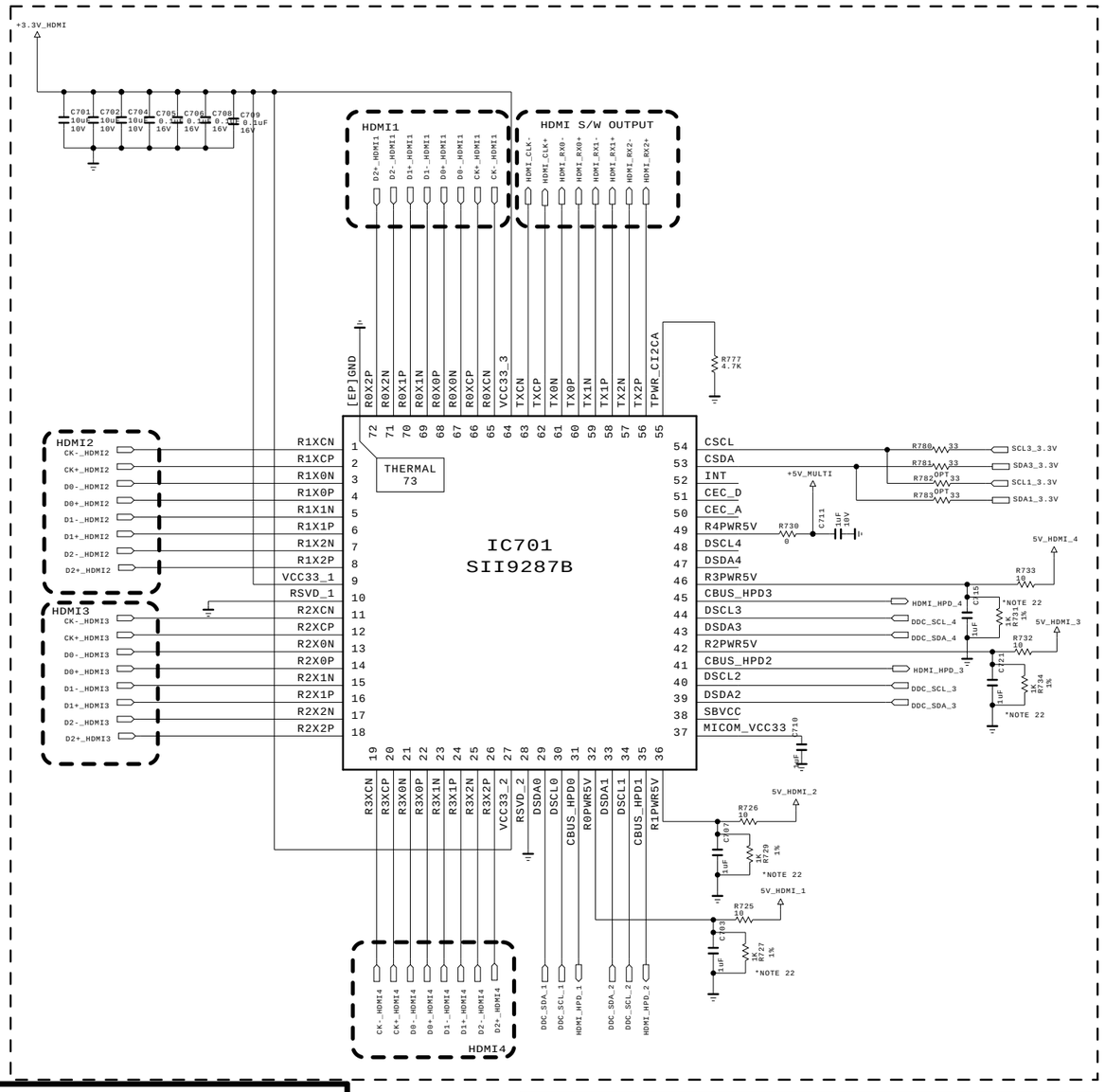

THE ⚠ SYMBOL MARK OF THIS SCHEMETIC DIAGRAM INCORPORATES SPECIAL FEATURES IMPORTANT FOR PROTECTION FROM X-RADIATION. FILRE AND ELECTRICAL SHOCK HAZARDS, WHEN SERVICING IF IS ESSENTIAL THAT ONLY MANUFATURES SPECFIED PARTS BE USED FOR THE CRITICAL COMPONENTS IN THE ⚠ SYMBOL MARK OF THE SCHEMETIC.

SECRET
LGElectronics

LG ELECTRONICS

MODEL	EAX63525101	DATE	
BLOCK	HDMI	SHEET	7 / 19

Copyright © 2010 LG Electronics Inc. All rights reserved.
Only for training and service purposes

RGB/ PC AUDIO/ SPDIF/ CVBS / COMP / RS232C

RGB PC

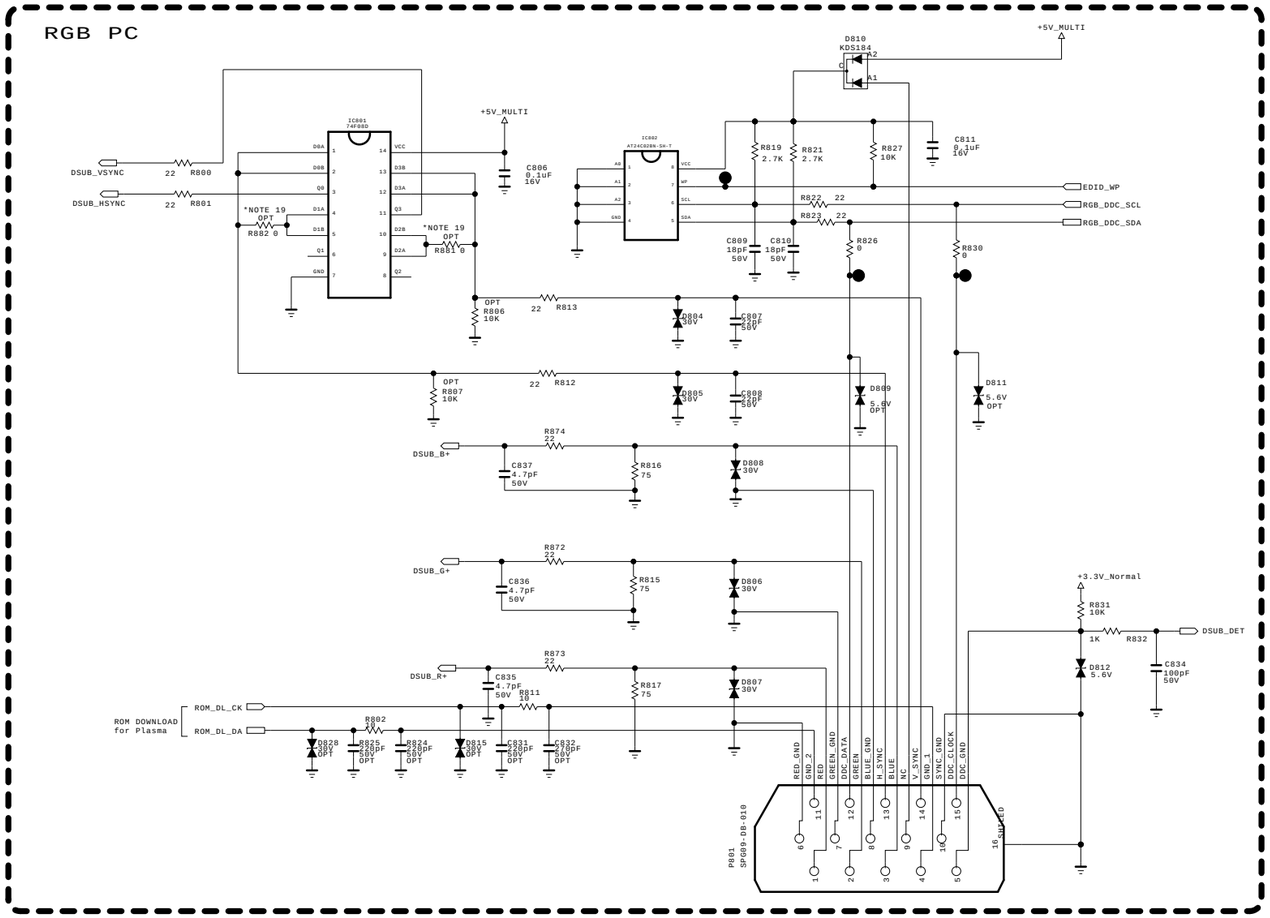

PC AUDIO

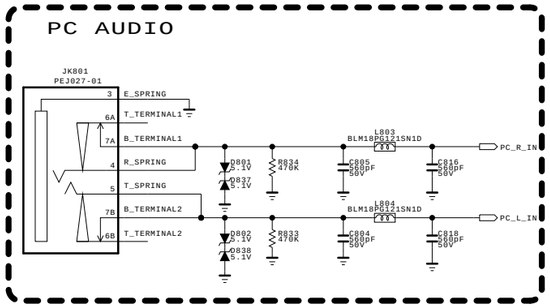

SPDIF OUT

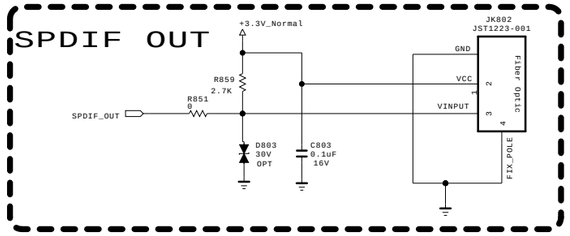

CVBS SIDE JACK

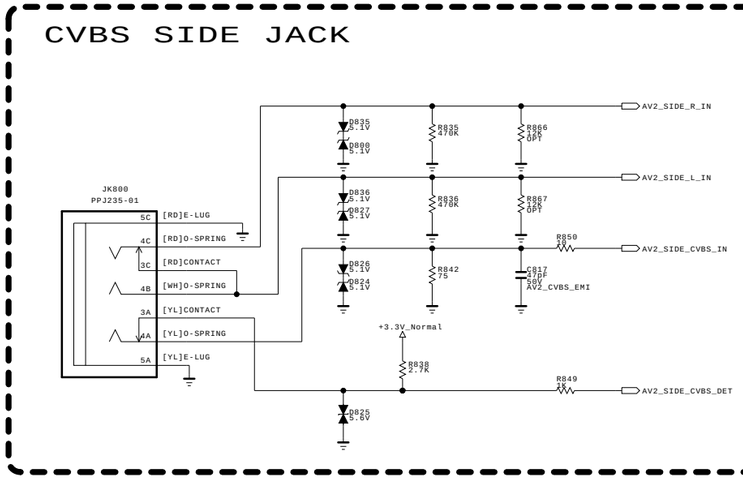

COMP/AV REAR JACK

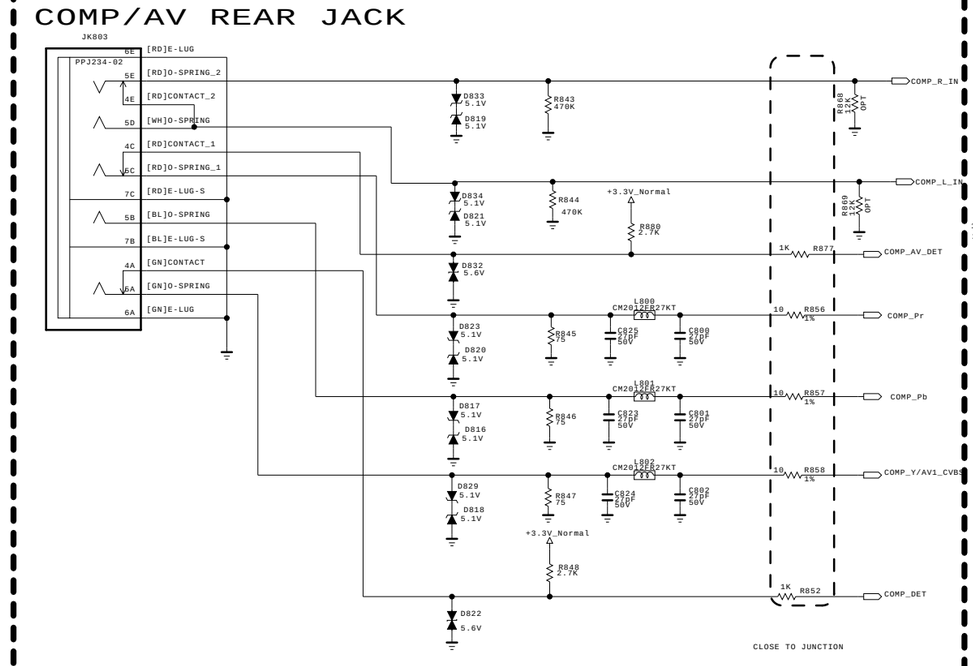

1. COMP_DET + COMP_AV_DET = COMPONENT
2. COMP_DET ONLY = AV

RS232C JACK

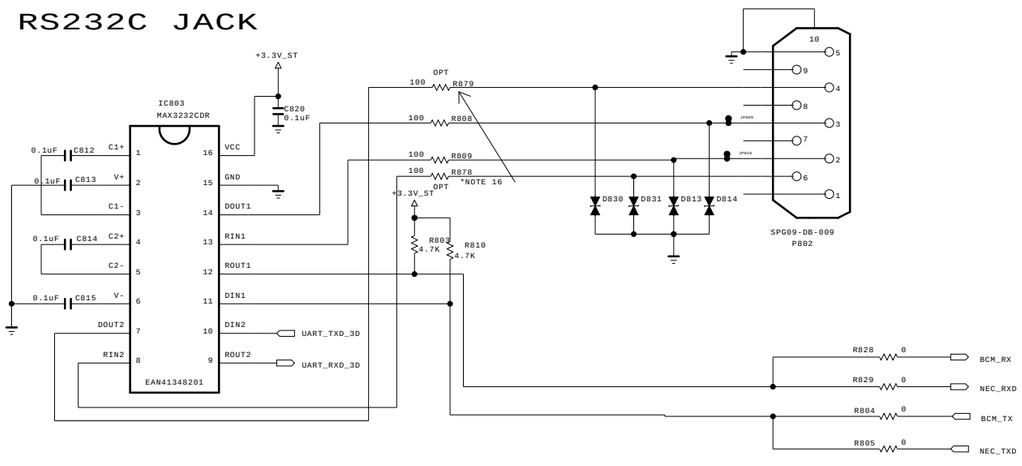

THE ⚠ SYMBOL MARK OF THIS SCHEMETIC DIAGRAM INCORPORATES SPECIAL FEATURES IMPORTANT FOR PROTECTION FROM X-RADIATION. FILRE AND ELECTRICAL SHOCK HAZARDS, WHEN SERVICING IF IS ESSENTIAL THAT ONLY MANUFATURES SPECFIED PARTS BE USED FOR THE CRITICAL COMPONENTS IN THE ⚠ SYMBOL MARK OF THE SCHEMETIC.

SECRET
LGElectronics

LG ELECTRONICS

MODEL	EAX63525101	DATE	
BLOCK	COMMON JACK	SHEET	8 / 19

Copyright © 2010 LG Electronics Inc. All rights reserved.
Only for training and service purposes

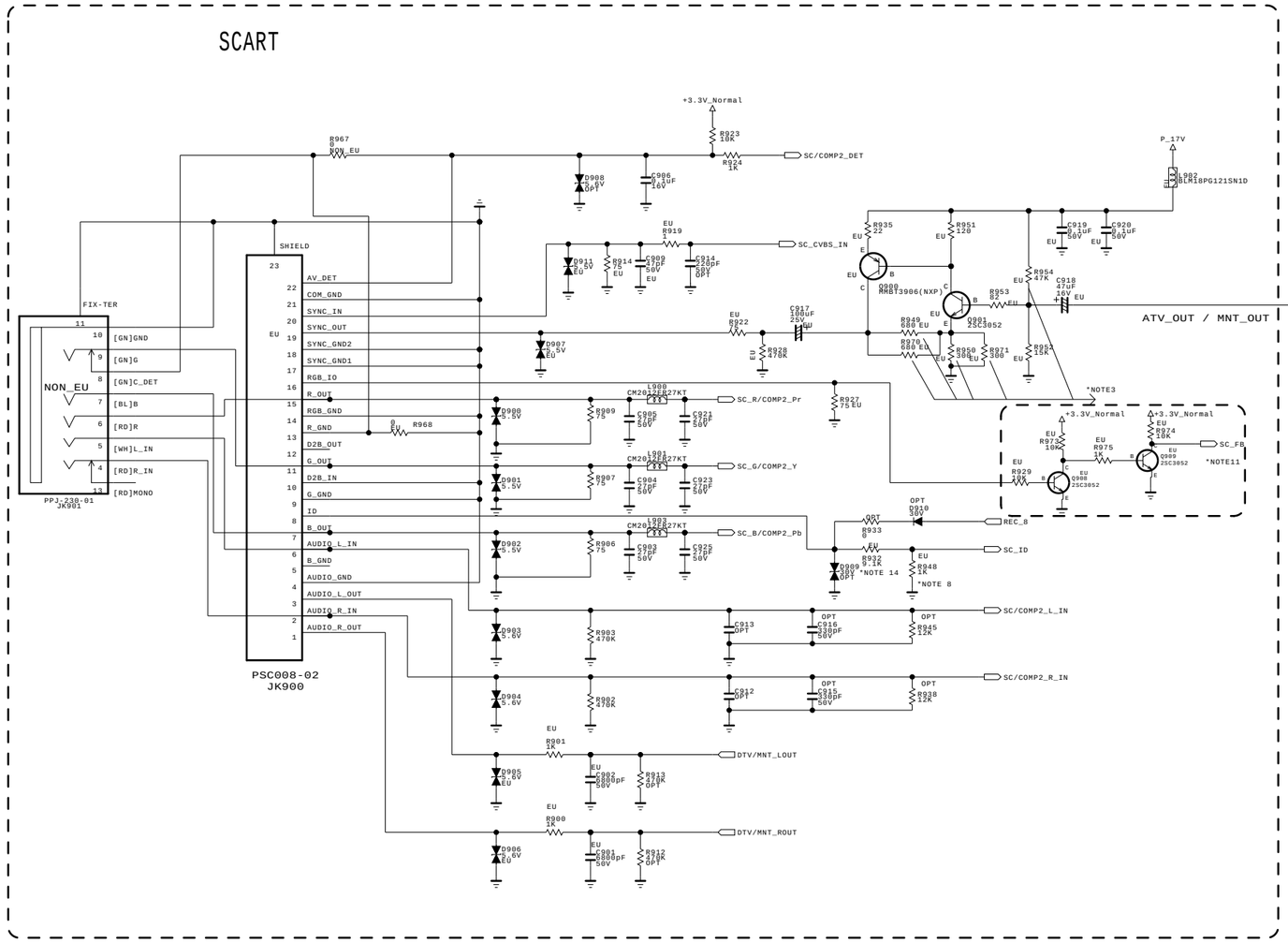

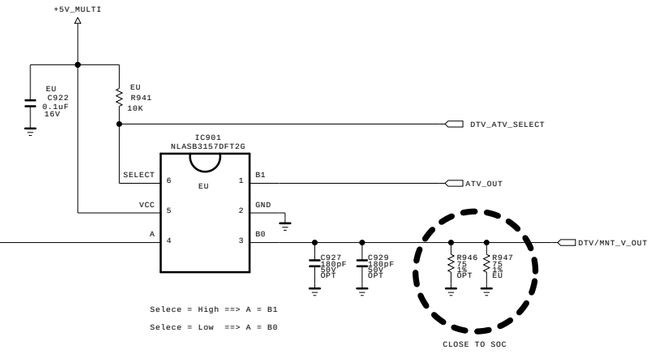

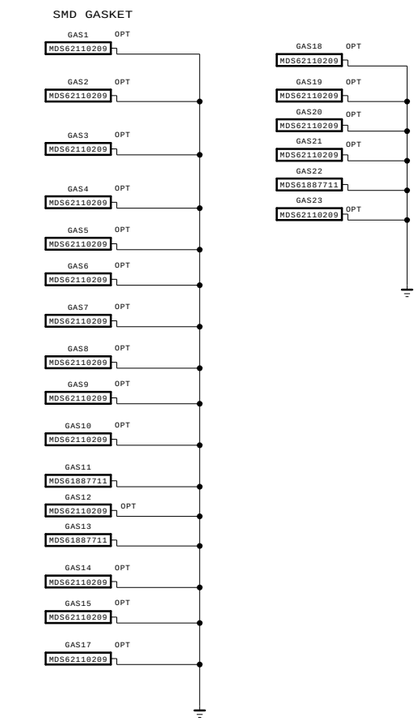

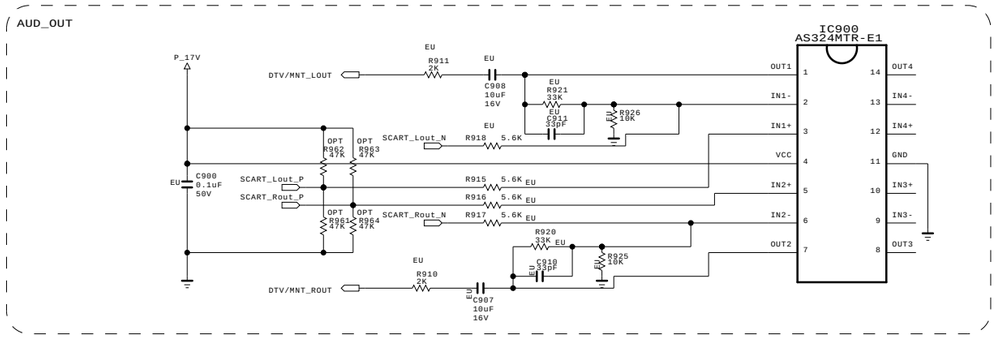

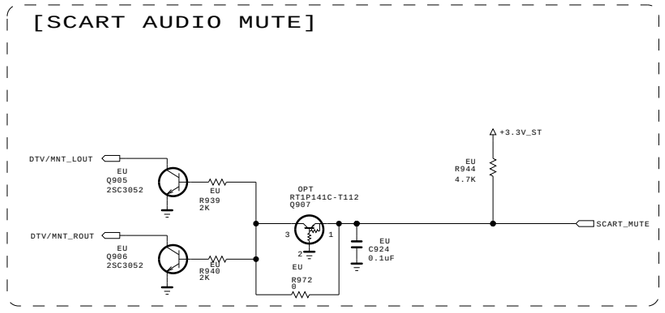

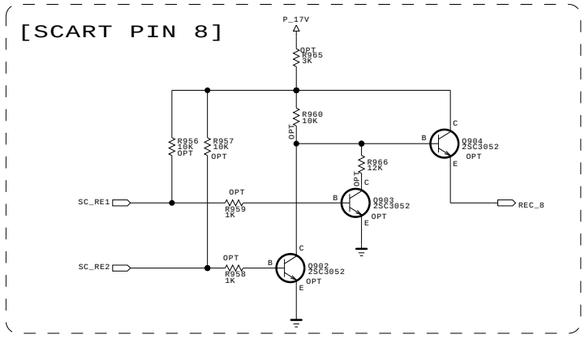

THE ⚠ SYMBOL MARK OF THIS SCHEMETIC DIAGRAM INCORPORATES SPECIAL FEATURES IMPORTANT FOR PROTECTION FROM X-RADIATION. FILRE AND ELECTRICAL SHOCK HAZARDS, WHEN SERVICING IF IS ESSENTIAL THAT ONLY MANUFATURES SPECFIED PARTS BE USED FOR THE CRITICAL COMPONENTS IN THE ⚠ SYMBOL MARK OF THE SCHEMETIC.

SECRET
LGElectronics

LG ELECTRONICS

MODEL	EAX63525101	DATE	
BLOCK	SCART	SHEET	09 / 19

Copyright © 2010 LG Electronics Inc. All rights reserved.
Only for training and service purposes

WIRELESS READY MODEL

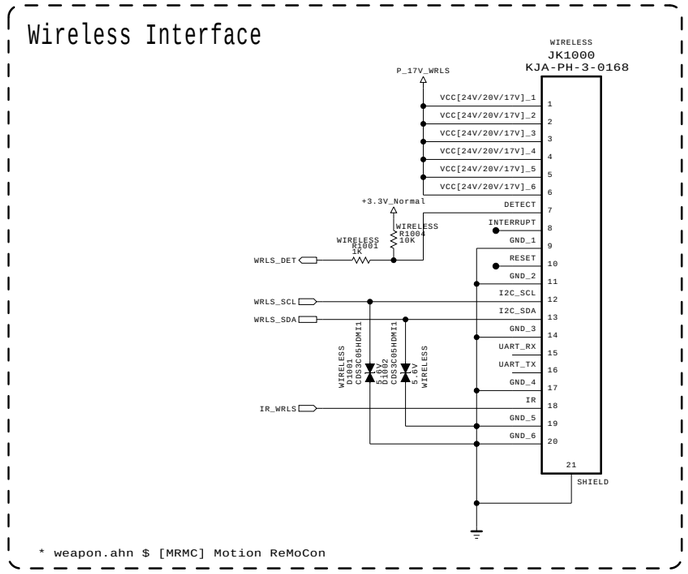

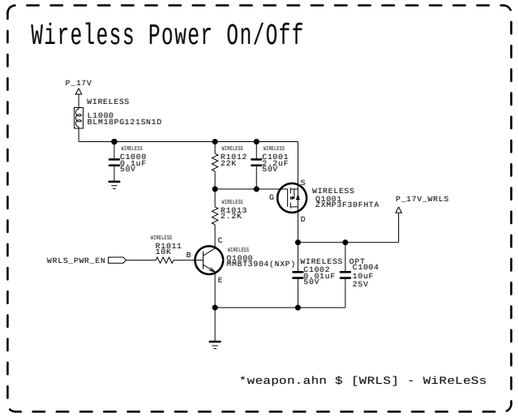

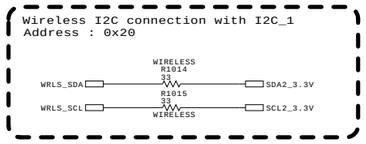

THE ⚠ SYMBOL MARK OF THIS SCHEMETIC DIAGRAM INCORPORATES SPECIAL FEATURES IMPORTANT FOR PROTECTION FROM X-RADIATION. FILRE AND ELECTRICAL SHOCK HAZARDS, WHEN SERVICING IF IS ESSENTIAL THAT ONLY MANUFATURES SPECFIED PARTS BE USED FOR THE CRITICAL COMPONENTS IN THE ⚠ SYMBOL MARK OF THE SCHEMETIC.

SECRET
LGElectronics

LG ELECTRONICS

MODEL	EAX63525101	DATE	
BLOCK	WIRELESS	SHEET	10 / 19

Copyright © 2010 LG Electronics Inc. All rights reserved.
Only for training and service purposes

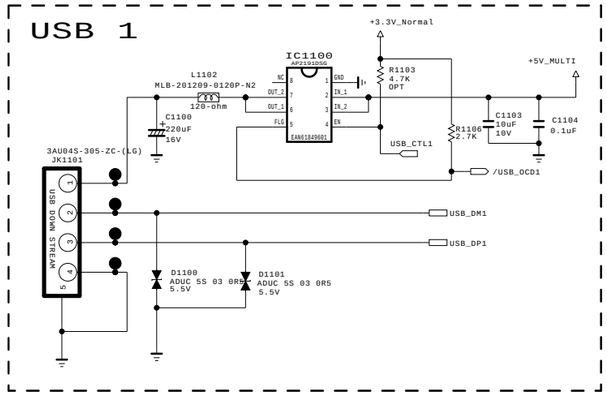

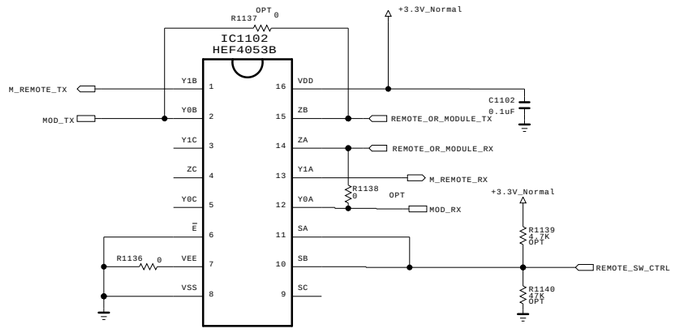

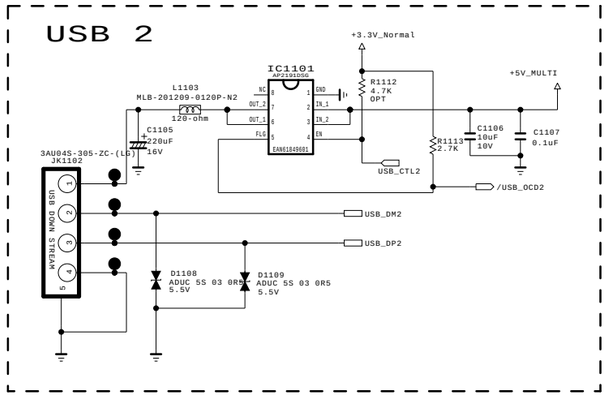

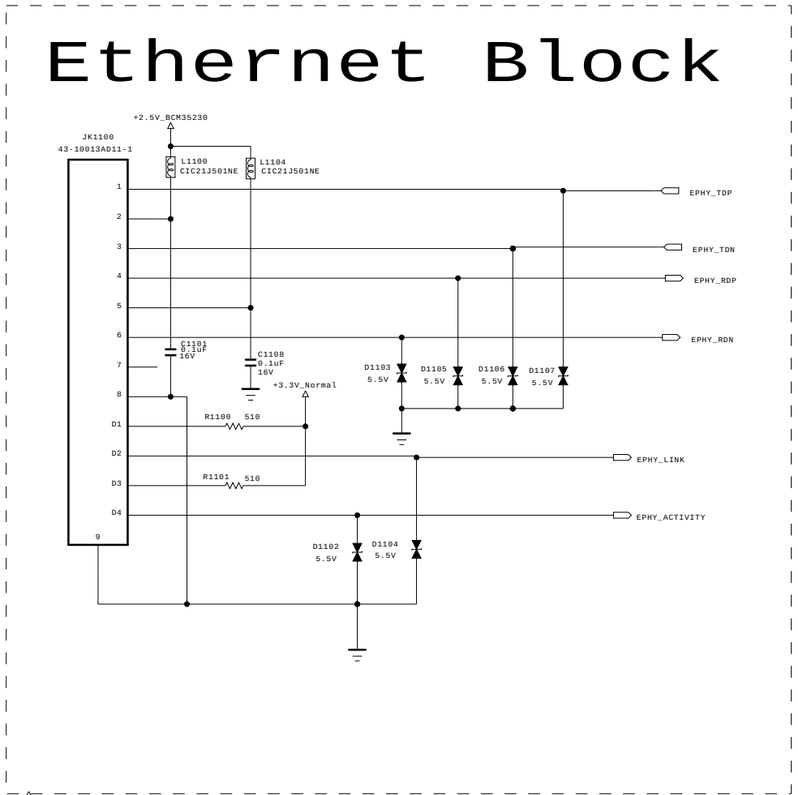

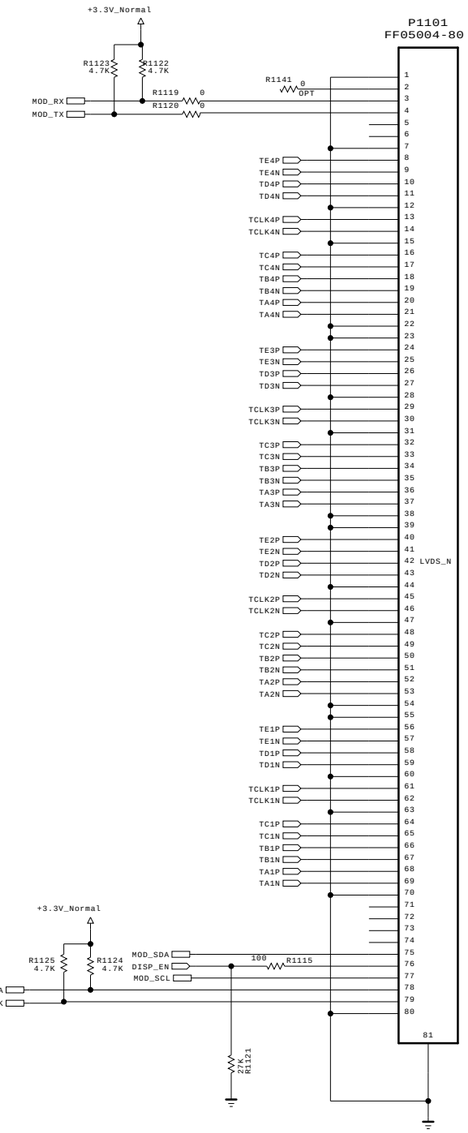

THE ⚠ SYMBOL MARK OF THIS SCHEMETIC DIAGRAM INCORPORATES SPECIAL FEATURES IMPORTANT FOR PROTECTION FROM X-RADIATION. FILRE AND ELECTRICAL SHOCK HAZARDS, WHEN SERVICING IF IS ESSENTIAL THAT ONLY MANUFATURES SPECFIED PARTS BE USED FOR THE CRITICAL COMPONENTS IN THE ⚠ SYMBOL MARK OF THE SCHEMETIC.

SECRET

LGElectronics

LG ELECTRONICS

MODEL	EAX63525101	DATE	
BLOCK	USB/Ethernet/LVDS	SHEET	11 / 19

Copyright © 2010 LG Electronics Inc. All rights reserved.
Only for training and service purposes

Motion Remote controller

TI solution M_REMOTE OPTION

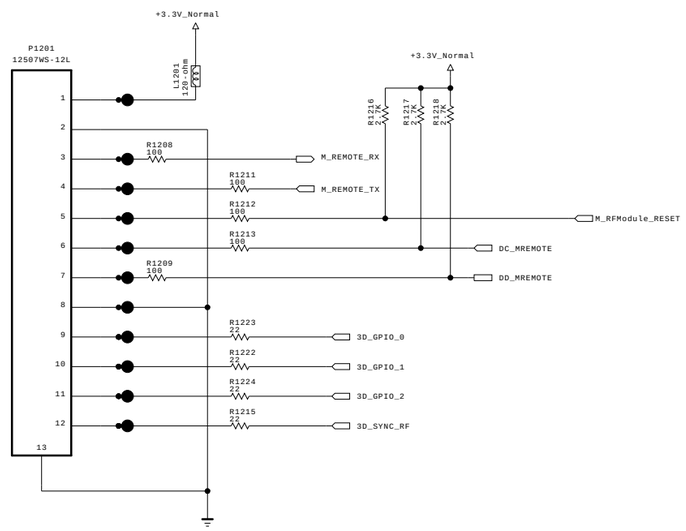

ALL M_REMOTE OPTION

THE ⚠ SYMBOL MARK OF THIS SCHEMETIC DIAGRAM INCORPORATES SPECIAL FEATURES IMPORTANT FOR PROTECTION FROM X-RADIATION. FILRE AND ELECTRICAL SHOCK HAZARDS, WHEN SERVICING IF IS ESSENTIAL THAT ONLY MANUFATURES SPECFIED PARTS BE USED FOR THE CRITICAL COMPONENTS IN THE ⚠ SYMBOL MARK OF THE SCHEMETIC.

SECRET
LGElectronics

LG ELECTRONICS

MODEL	EAX63525101	DATE	
BLOCK	M_REMOCON	SHEET	12 / 19

Copyright © 2010 LG Electronics Inc. All rights reserved.
Only for training and service purposes

AUDIO AMP

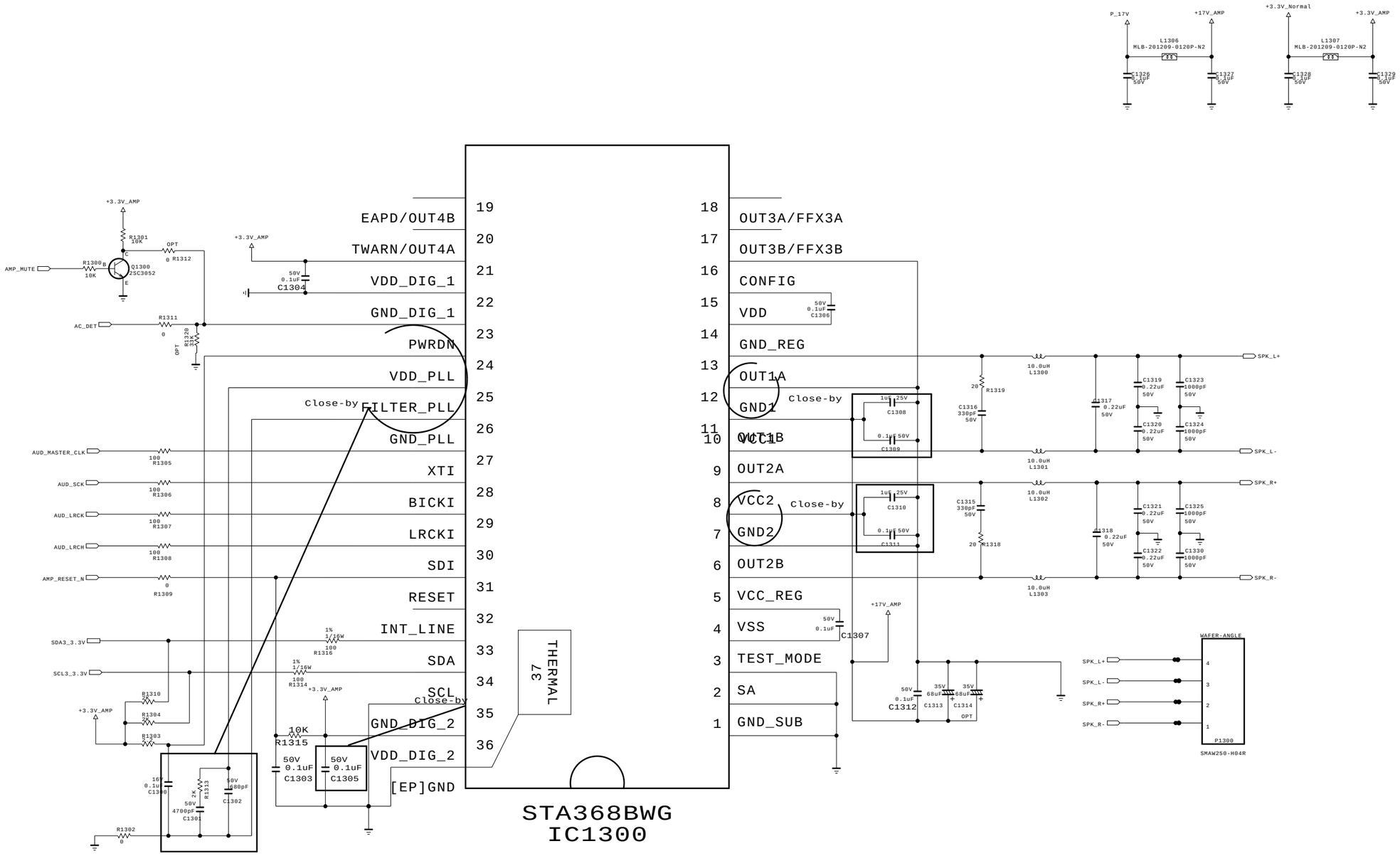

THE ⚠ SYMBOL MARK OF THIS SCHEMETIC DIAGRAM INCORPORATES SPECIAL FEATURES IMPORTANT FOR PROTECTION FROM X-RADIATION. FILRE AND ELECTRICAL SHOCK HAZARDS, WHEN SERVICING IF IS ESSENTIAL THAT ONLY MANUFATURES SPECFIED PARTS BE USED FOR THE CRITICAL COMPONENTS IN THE ⚠ SYMBOL MARK OF THE SCHEMETIC.

SECRET
LGElectronics

LG ELECTRONICS

MODEL	EAX63525101	DATE	
BLOCK	AUDIO[ST]	SHEET	13 / 19

Copyright © 2010 LG Electronics Inc. All rights reserved.
Only for training and service purposes

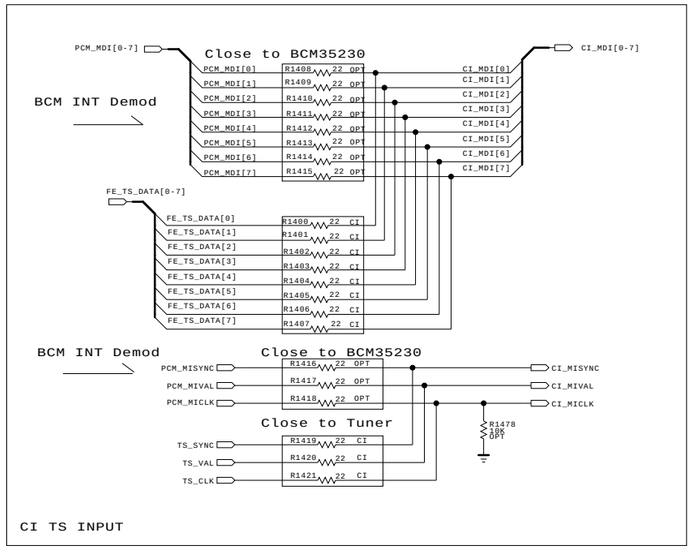

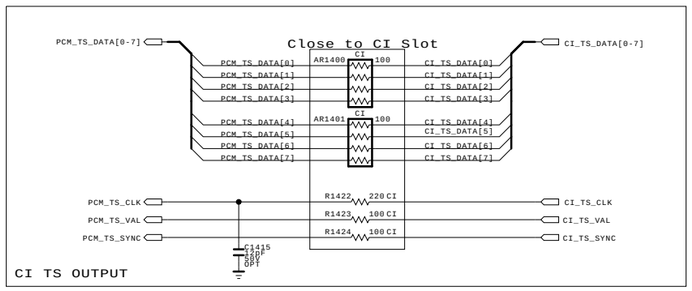

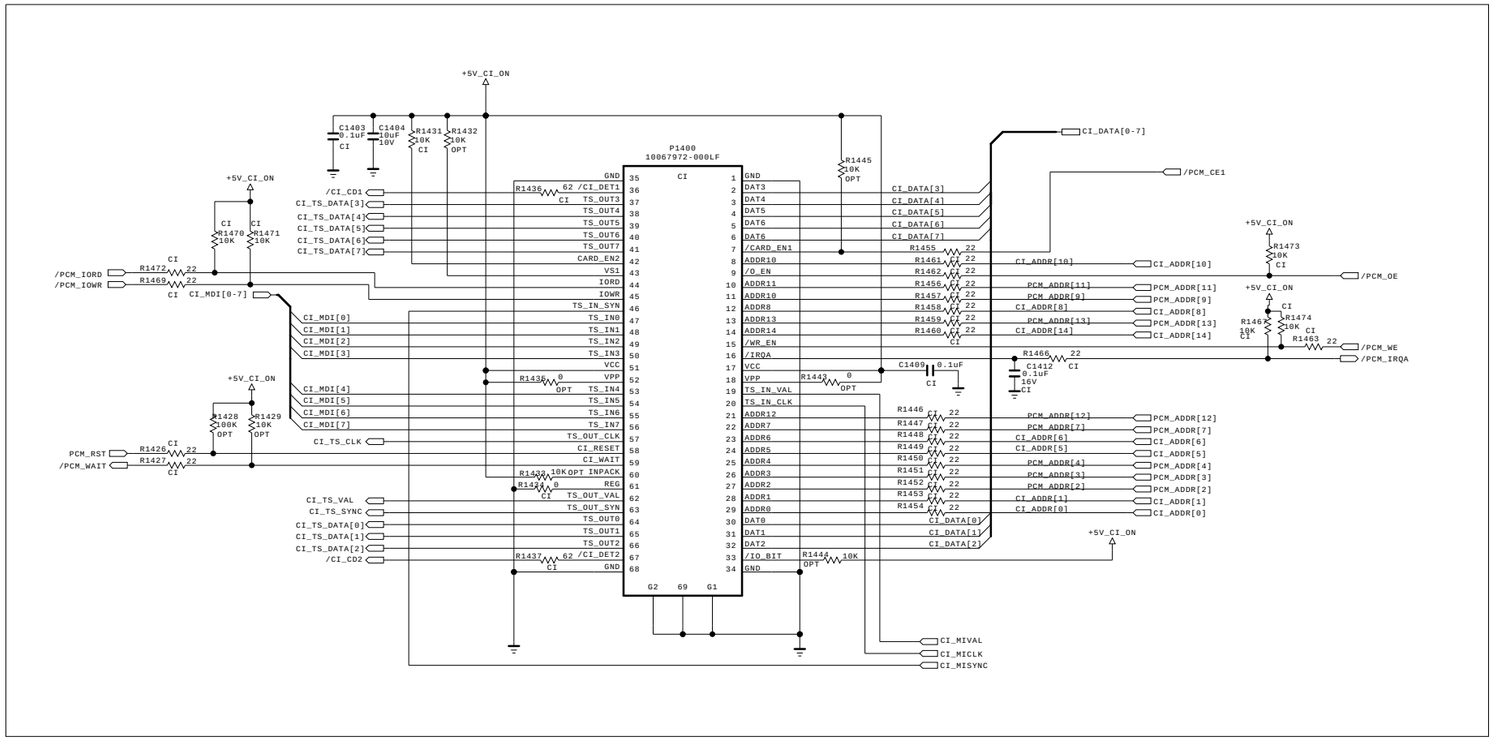

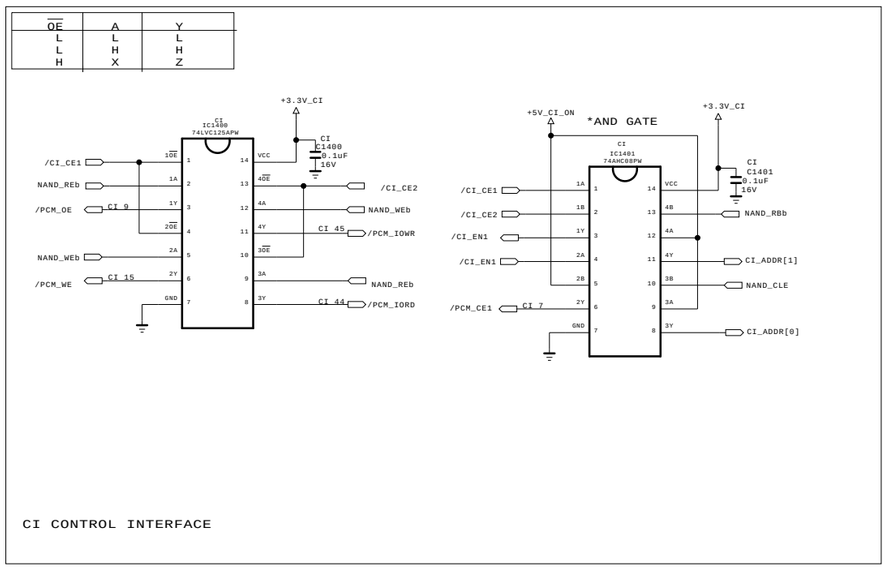

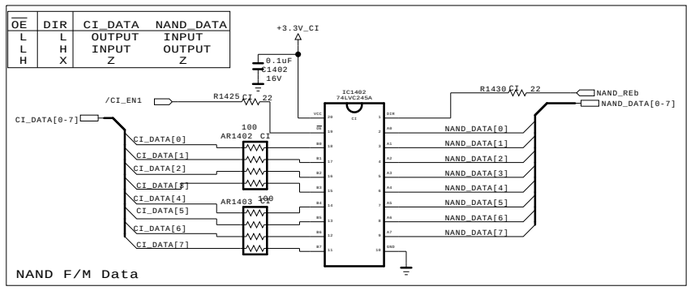

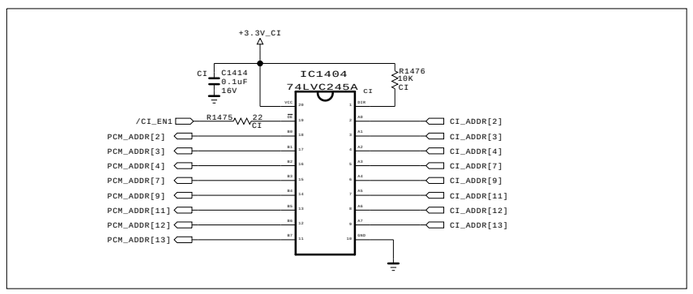

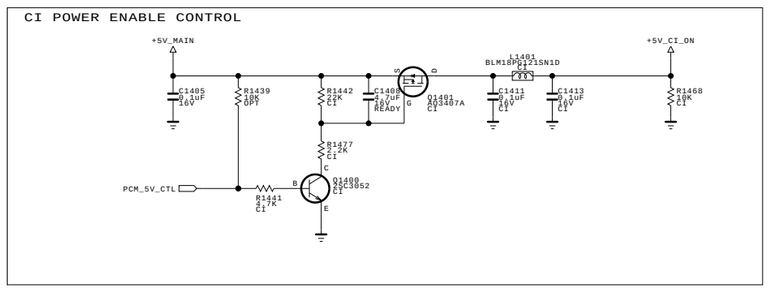

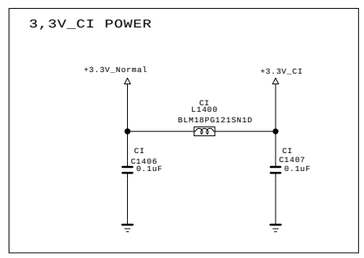

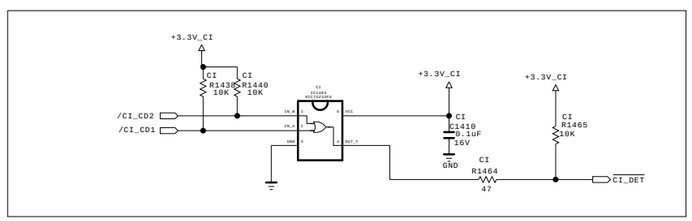

THE ⚠ SYMBOL MARK OF THIS SCHEMETIC DIAGRAM INCORPORATES SPECIAL FEATURES IMPORTANT FOR PROTECTION FROM X-RADIATION. FILRE AND ELECTRICAL SHOCK HAZARDS, WHEN SERVICING IF IS ESSENTIAL THAT ONLY MANUFATURES SPECFIED PARTS BE USED FOR THE CRITICAL COMPONENTS IN THE ⚠ SYMBOL MARK OF THE SCHEMETIC.

SECRET
LGElectronics

LG ELECTRONICS

MODEL	EAX63525101	DATE	
BLOCK	CI	SHEET	14 / 19

Copyright © 2010 LG Electronics Inc. All rights reserved.
Only for training and service purposes

F/NIM & T/C/S2 Combo Tuner

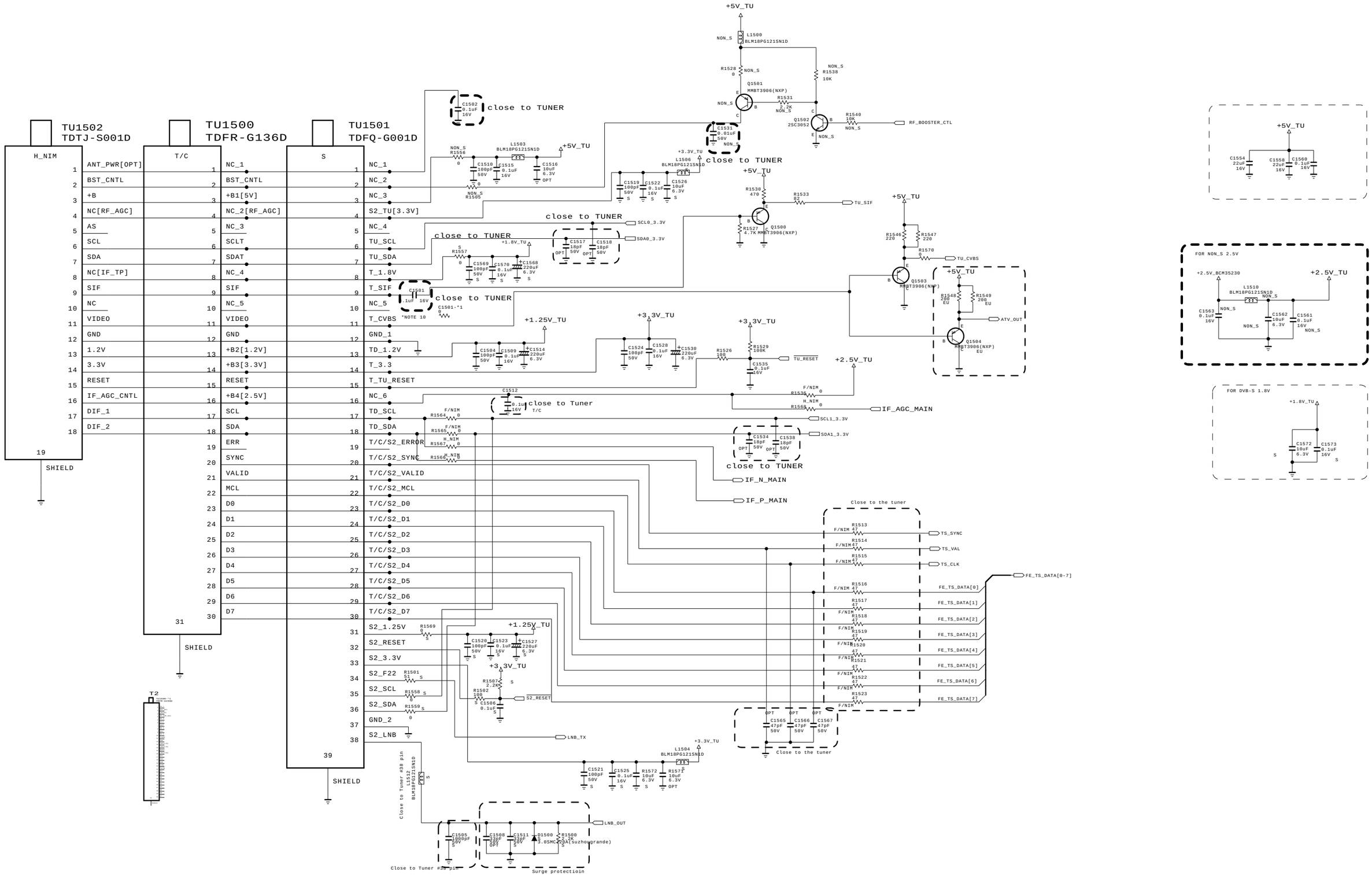

THE ⚠ SYMBOL MARK OF THIS SCHEMETIC DIAGRAM INCORPORATES SPECIAL FEATURES IMPORTANT FOR PROTECTION FROM X-RADIATION. FILRE AND ELECTRICAL SHOCK HAZARDS, WHEN SERVICING IF IS ESSENTIAL THAT ONLY MANUFATURES SPECFIED PARTS BE USED FOR THE CRITICAL COMPONENTS IN THE ⚠ SYMBOL MARK OF THE SCHEMETIC.

SECRET
LGElectronics

LG ELECTRONICS

MODEL	EAX63525101	DATE	
BLOCK	TUNER	SHEET	15 / 19

Copyright © 2010 LG Electronics Inc. All rights reserved.
Only for training and service purposes

DVB-S2 LNB Part_Allegro

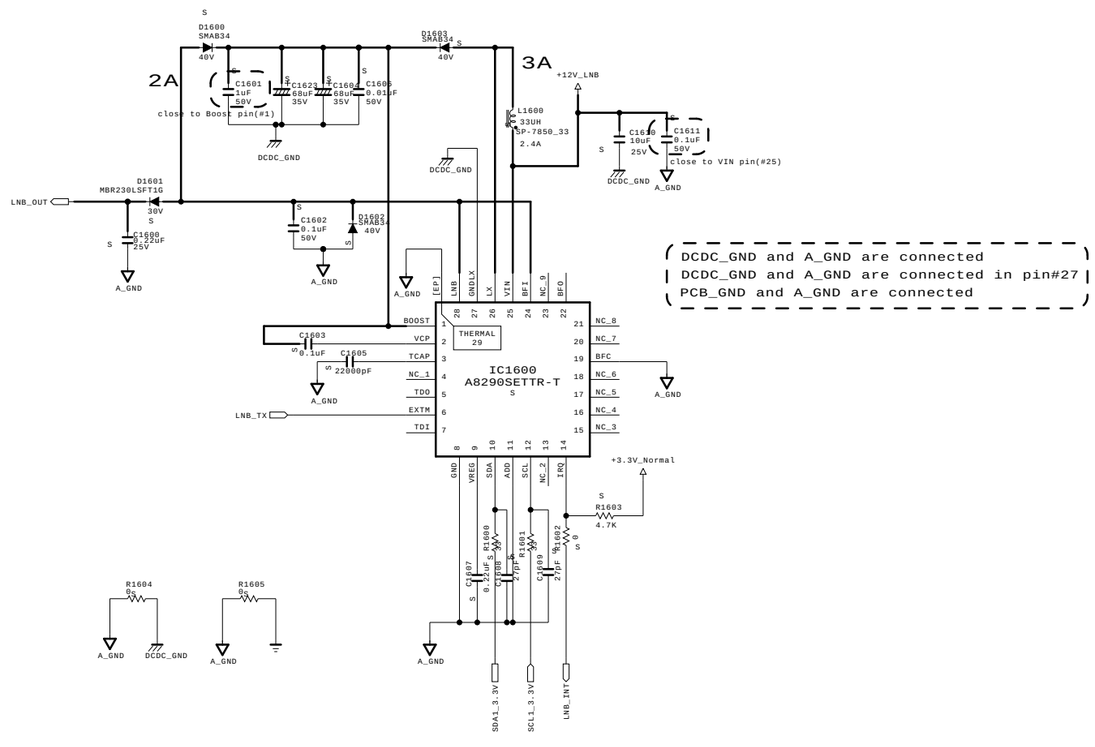

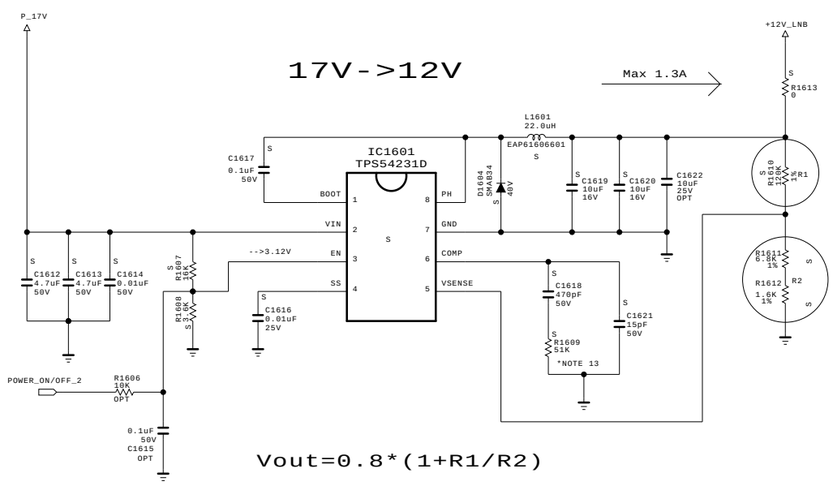

THE ⚠ SYMBOL MARK OF THIS SCHEMETIC DIAGRAM INCORPORATES SPECIAL FEATURES IMPORTANT FOR PROTECTION FROM X-RADIATION. FILRE AND ELECTRICAL SHOCK HAZARDS, WHEN SERVICING IF IS ESSENTIAL THAT ONLY MANUFATURES SPECFIED PARTS BE USED FOR THE CRITICAL COMPONENTS IN THE ⚠ SYMBOL MARK OF THE SCHEMETIC.

SECRET
LGElectronics

LG ELECTRONICS

MODEL	EAX63525101	DATE	
BLOCK	LNB	SHEET	16 / 19

Copyright © 2010 LG Electronics Inc. All rights reserved.
Only for training and service purposes

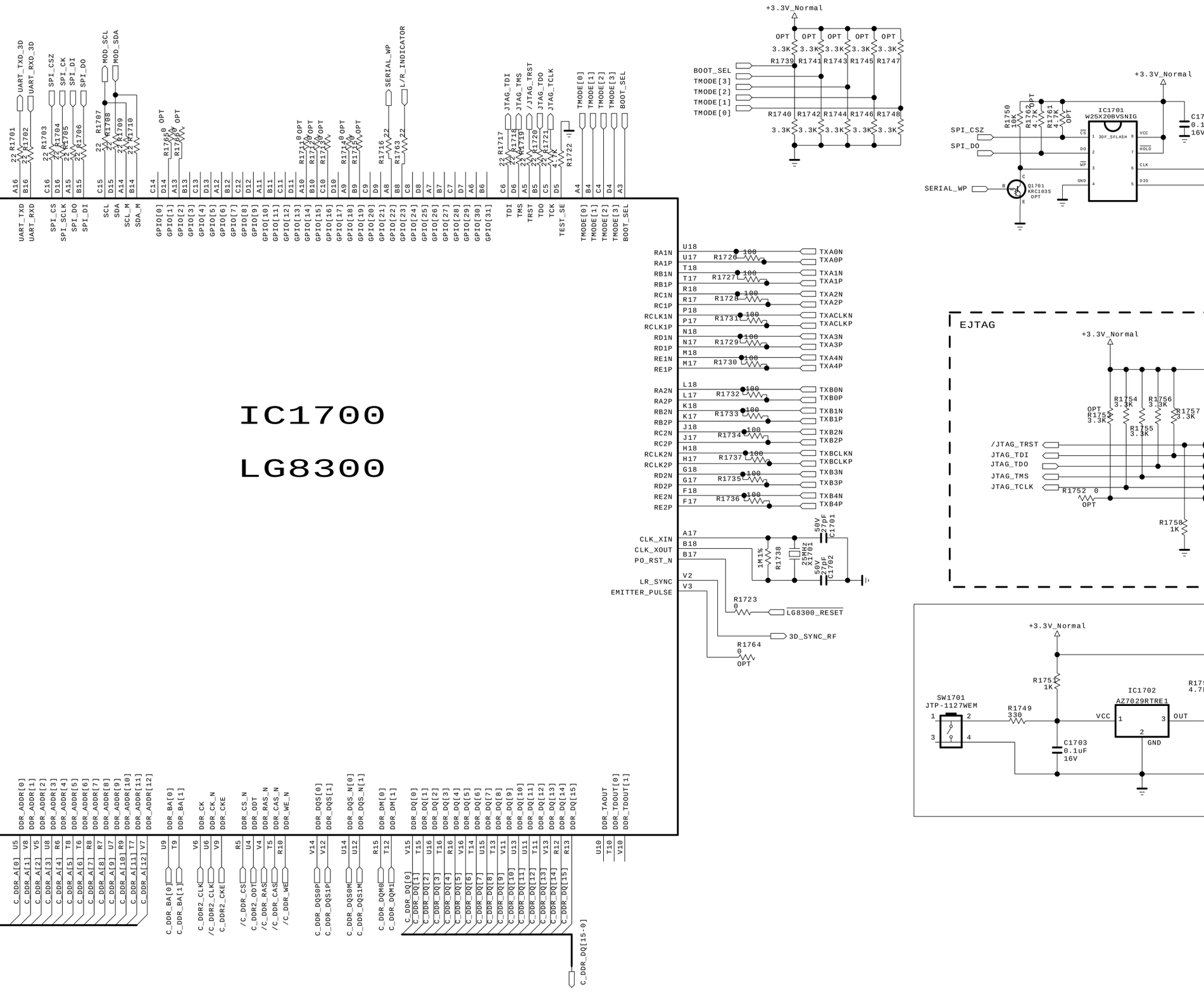

SCHEMETIC DIAGRAM INCORPORATES
FOR PROTECTION FROM X-RADIATION.
HAZARDS, WHEN SERVICING IF IS
TURES SPECFIED PARTS BE USED FOR
THE ⚠ SYMBOL MARK OF THE SCHEMETIC.

SECRET
LGElectronics

LG ELECTRONICS

MODEL	EAX63525101	DATE	
BLOCK	LG8300	SHEET	1

LGE Internal Use Only

Copyright © 2010 LG Electronics Inc. All rights reserved
Only for training and service purposes

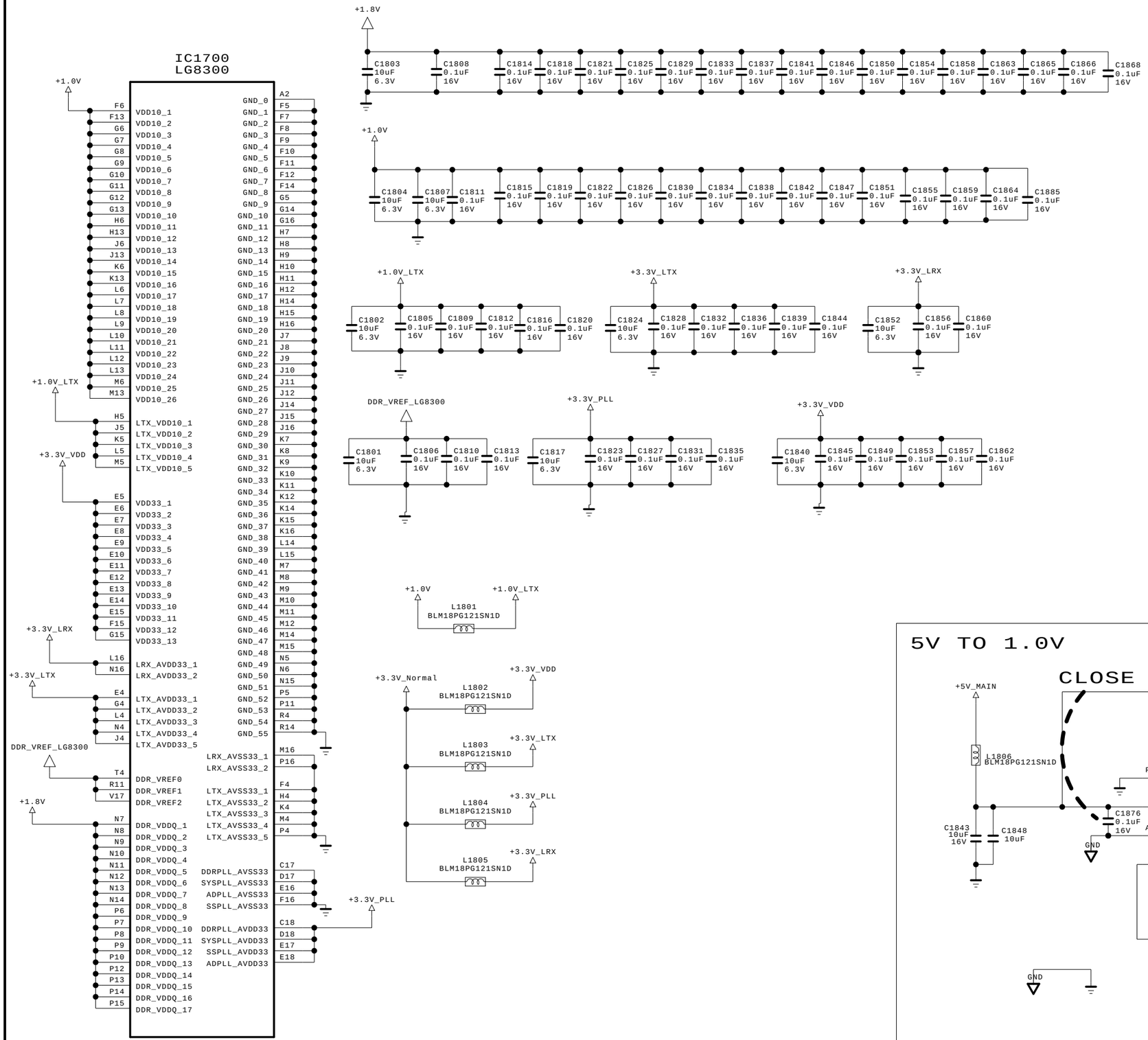

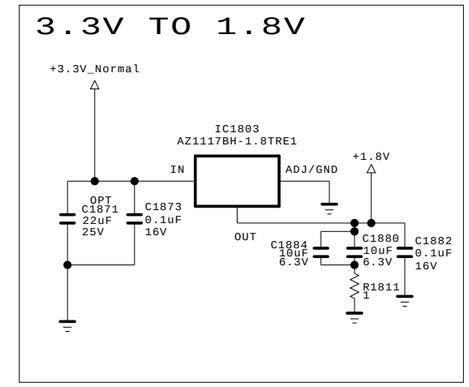

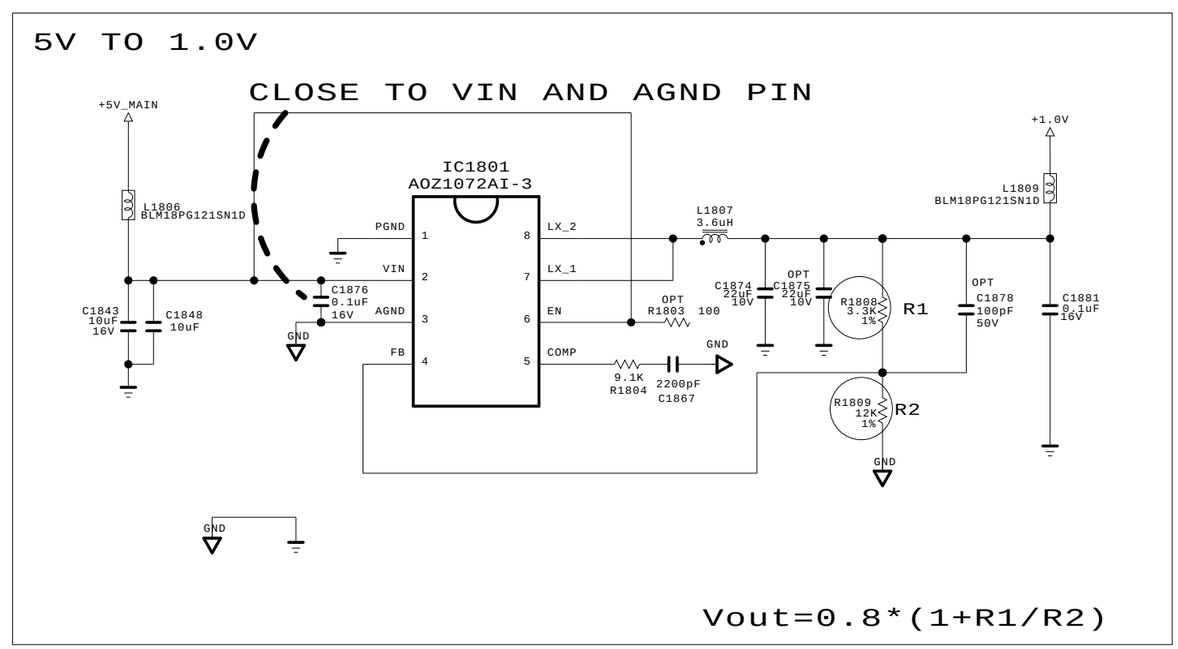

THE ⚠ SYMBOL MARK OF THIS SCHEMETIC DIAGRAM INCORPORATES SPECIAL FEATURES IMPORTANT FOR PROTECTION FROM X-RADIATION. FILRE AND ELECTRICAL SHOCK HAZARDS, WHEN SERVICING IF IS ESSENTIAL THAT ONLY MANUFATURES SPECFIED PARTS BE USED FOR THE CRITICAL COMPONENTS IN THE ⚠ SYMBOL MARK OF THE SCHEMETIC.

SECRET

LGElectronics

LG ELECTRONICS

MODEL	EAX63525101	DATE	
BLOCK	LG8300_POWER	SHEET	18 / 19

Copyright © 2010 LG Electronics Inc. All rights reserved.
Only for training and service purposes

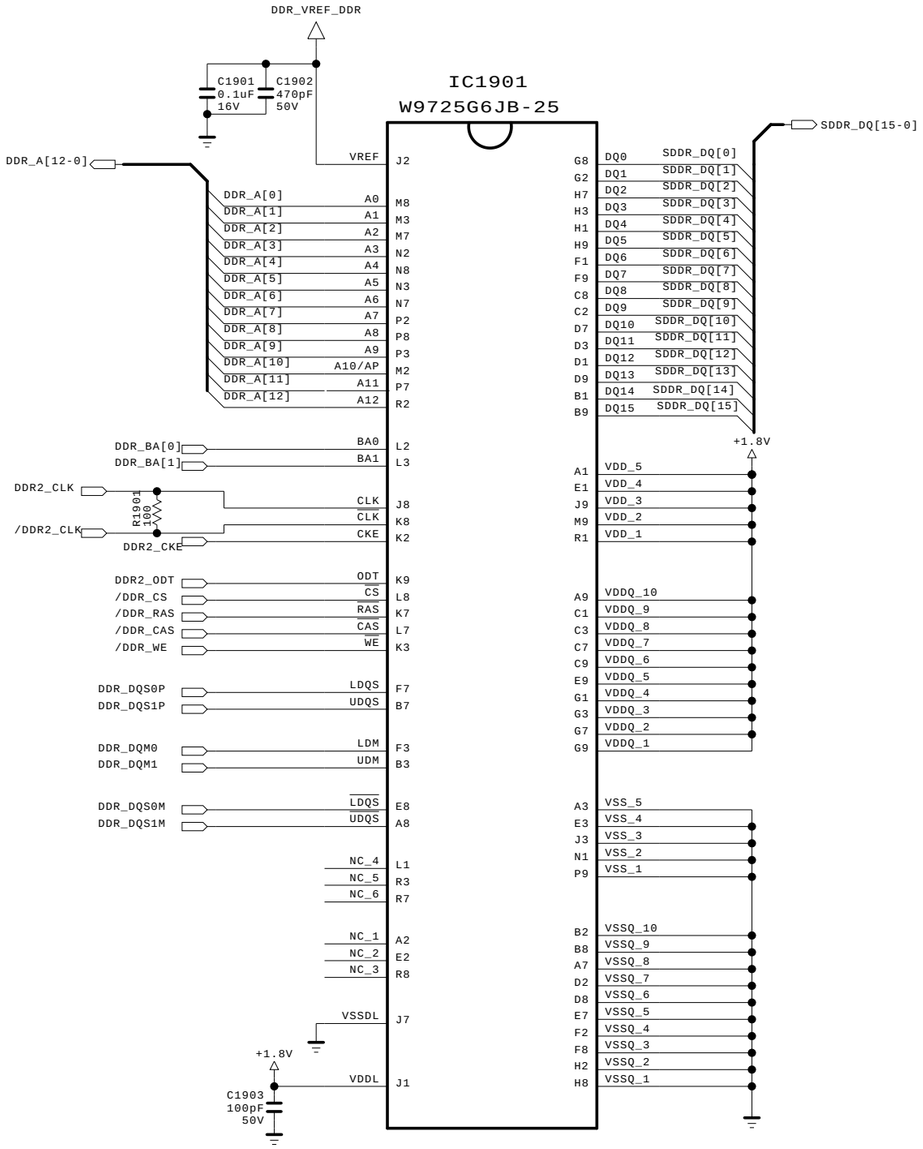

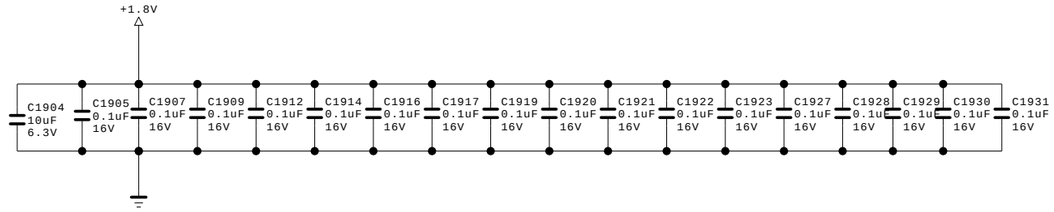

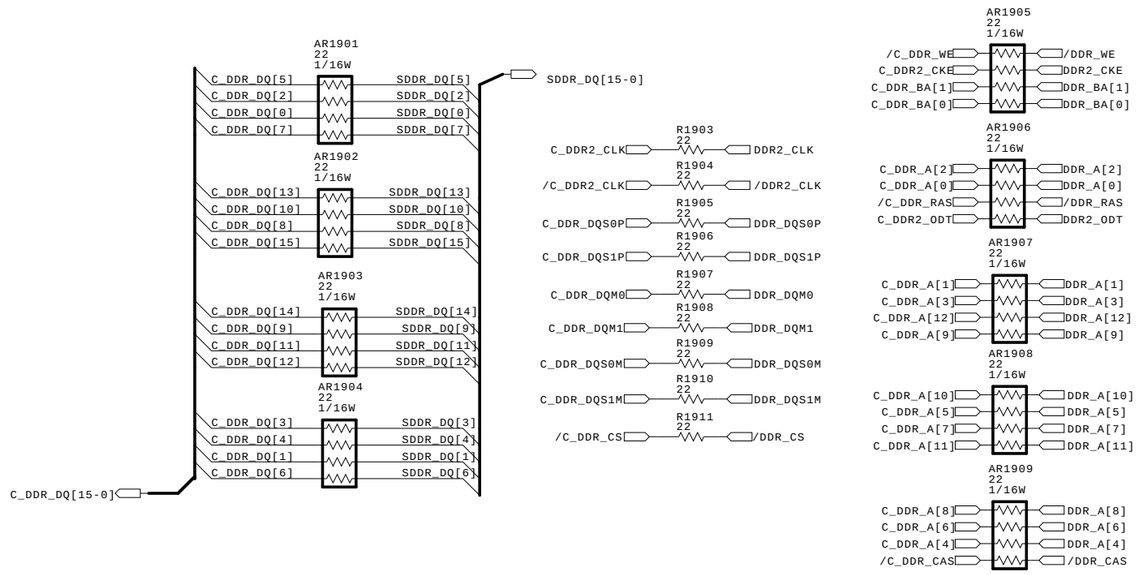

DDR VTT

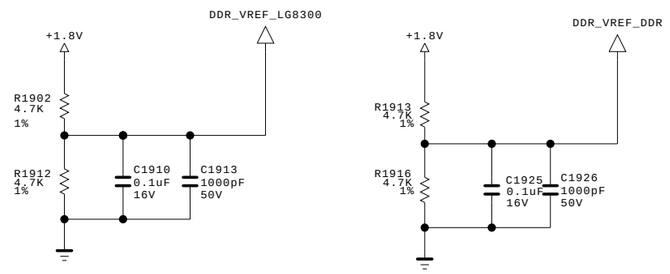

THE ⚠ SYMBOL MARK OF THIS SCHEMETIC DIAGRAM INCORPORATES SPECIAL FEATURES IMPORTANT FOR PROTECTION FROM X-RADIATION. FILRE AND ELECTRICAL SHOCK HAZARDS, WHEN SERVICING IF IS ESSENTIAL THAT ONLY MANUFATURES SPECFIED PARTS BE USED FOR THE CRITICAL COMPONENTS IN THE ⚠ SYMBOL MARK OF THE SCHEMETIC.

SECRET
LGElectronics

LG ELECTRONICS

MODEL	EAX63525101	DATE	
BLOCK	LG8300_DDR	SHEET	19 / 19

Copyright © 2010 LG Electronics Inc. All rights reserved.
Only for training and service purposes

LG Electronics Inc.

PDP TV Repair Guide

< Applicable Model >
- 50PZ900,50PZ700,50PZ500
(Apply Full HD Module in 50PZ950/750/570)

ⓒ LG Electronics. Inc.2010

PDP TV Repair Process Index

No.	Symptom (L)	Symptom (M)	Page	Remark
1	A. Picture Problem	No Picture/Sound OK	1	
2		No Picture/No sound	2	
3		Mal-discharge/Noise/dark picture	3	
4		Picture broken/Freezing	4	
5		Vertical bar/ Horizontal Bar	5	
6	B. Power Problem	No Power (Not turn on)	6	
7		Turn off (Instant, under watching)	7	
8	C. Sound Problem	No sound/ Sound distortion	8	
9	E. General function Problem	Remote control & Local Key checking	9	

First of all, Check whether there is SVC Bulletin in GCSC System for these model.

ⓒ LG Electronics. Inc.2010

Repair Process

PDP TV	Symptom	A. Picture Problem	Making	2010. 12 . 24	전자 - 6-2
		No Picture/Sound OK	Revision		1/9

First of all, Check whether all of cable between board was inserted properly or not.
(Main B/D↔ Power B/D, Power B/D↔ Y-sus B/D,Y-Sus B/D ↔Z-Sus B/D,LVDS Cable,Speaker Cable,IR B/D Cable,,,)

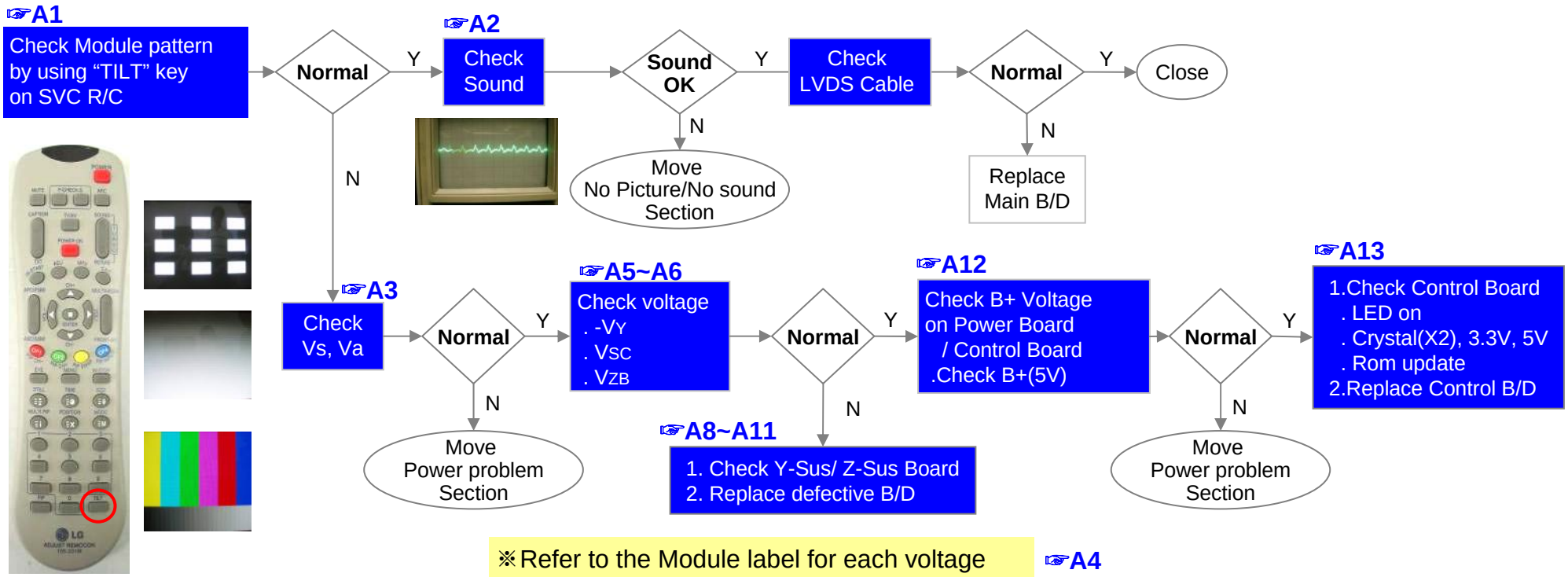

<SVC R/C & Pattern>

※Refer to the Module label for each voltage ☞A4

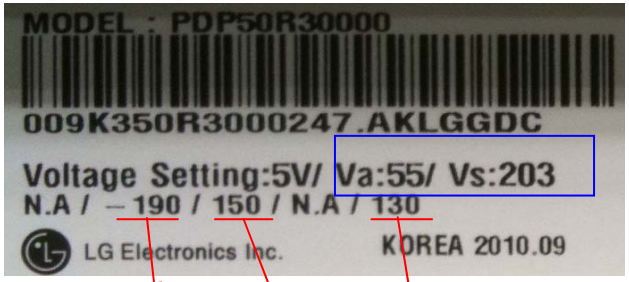

-VY VSC VZB

ⓒ LG Electronics. Inc.2010

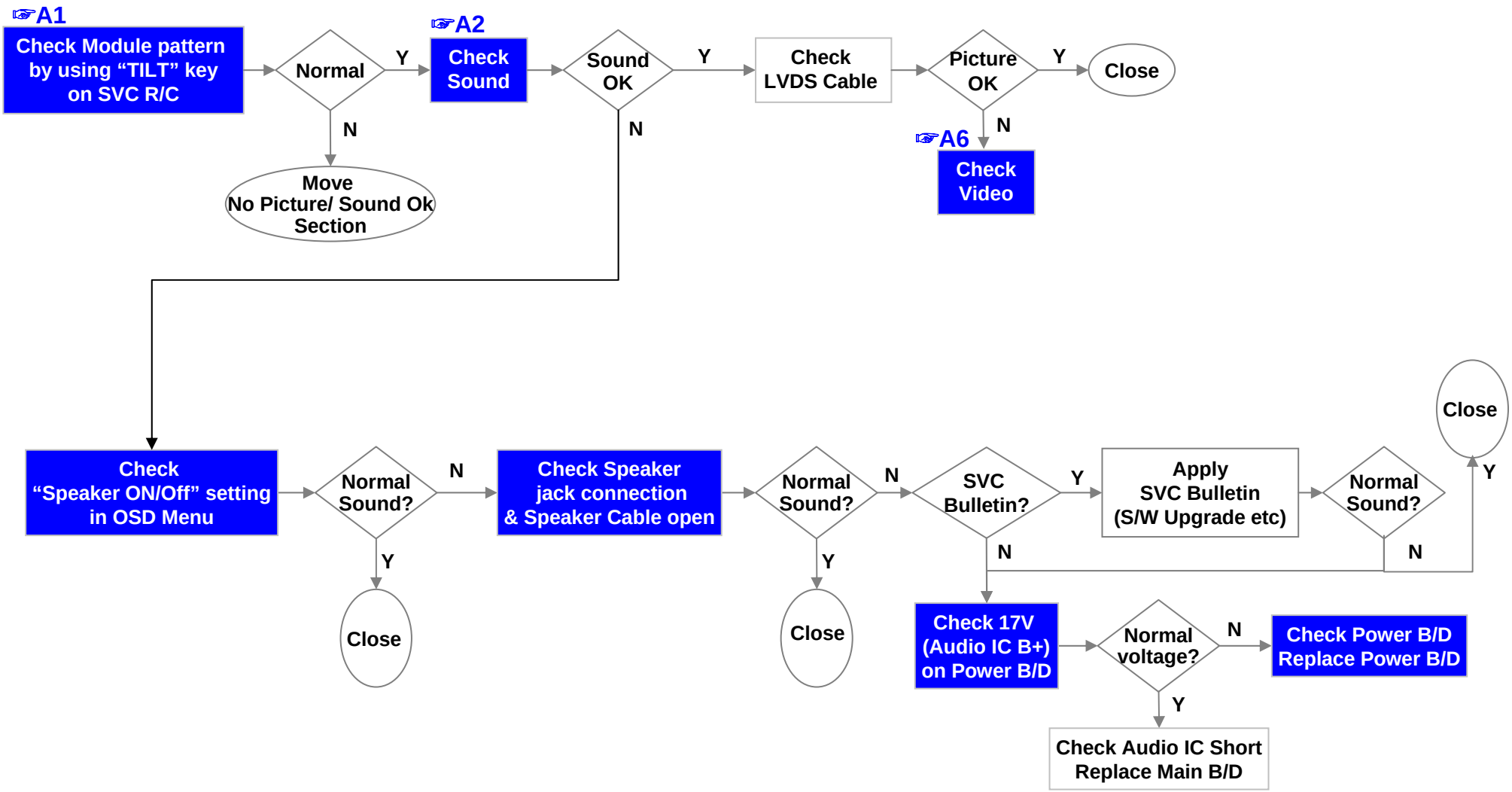

ⓒ LG Electronics. Inc.2010

PDP TV	Symptom	A. Picture Problem	Making	2010. 12 . 24	전자 - 6-2
		Mal-discharge/Noise/dark picture	Revision		3/9

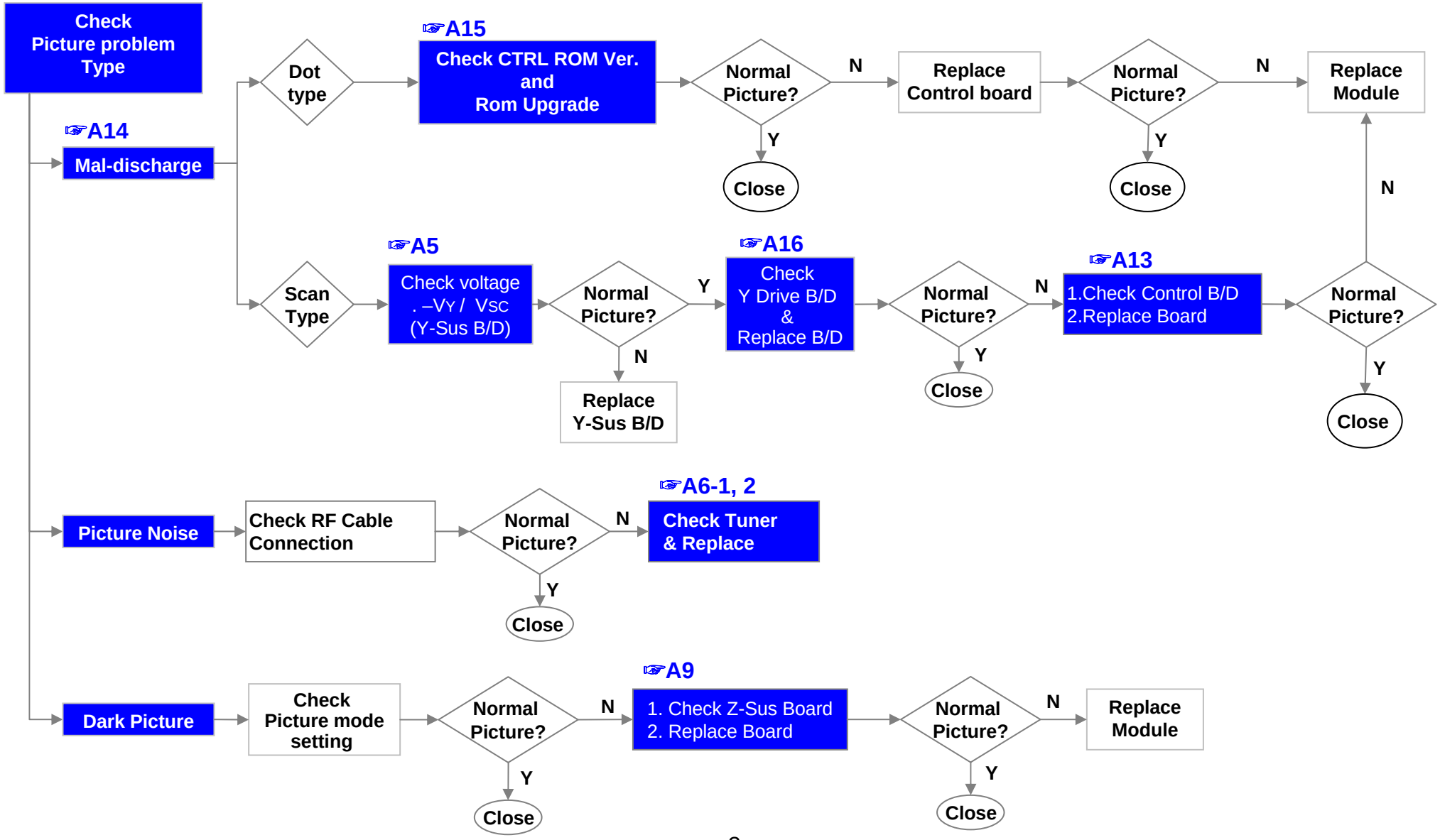

ⓒ LG Electronics. Inc.2010

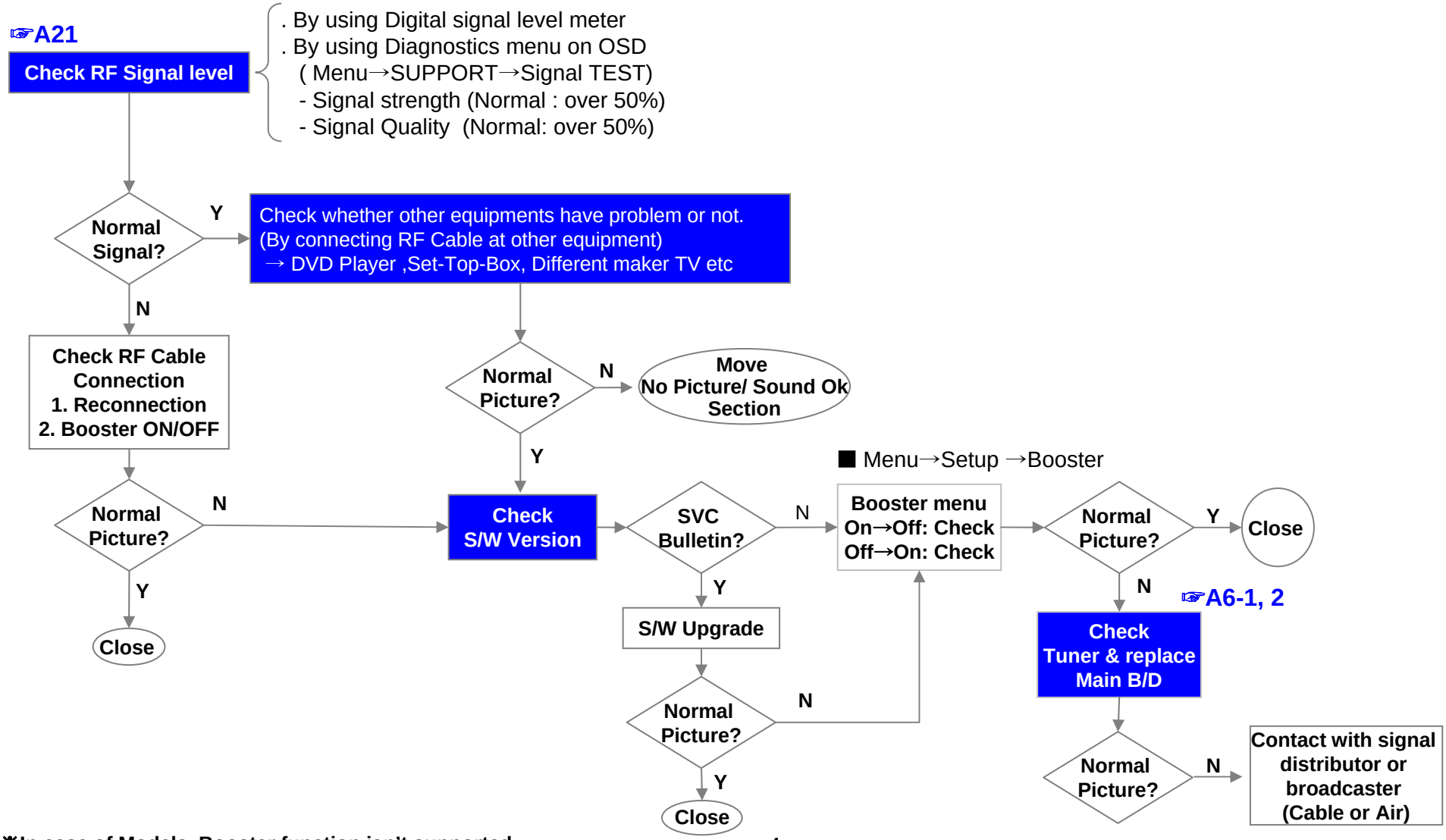

※In case of Models, Booster function isn't supported.

ⓒ LG Electronics. Inc.2010

PDP TV	Symptom	A. Picture Problem	Making	2010. 12 . 24	전자 - 6-2
		Vertical bar/ Horizontal Bar	Revision		5/9

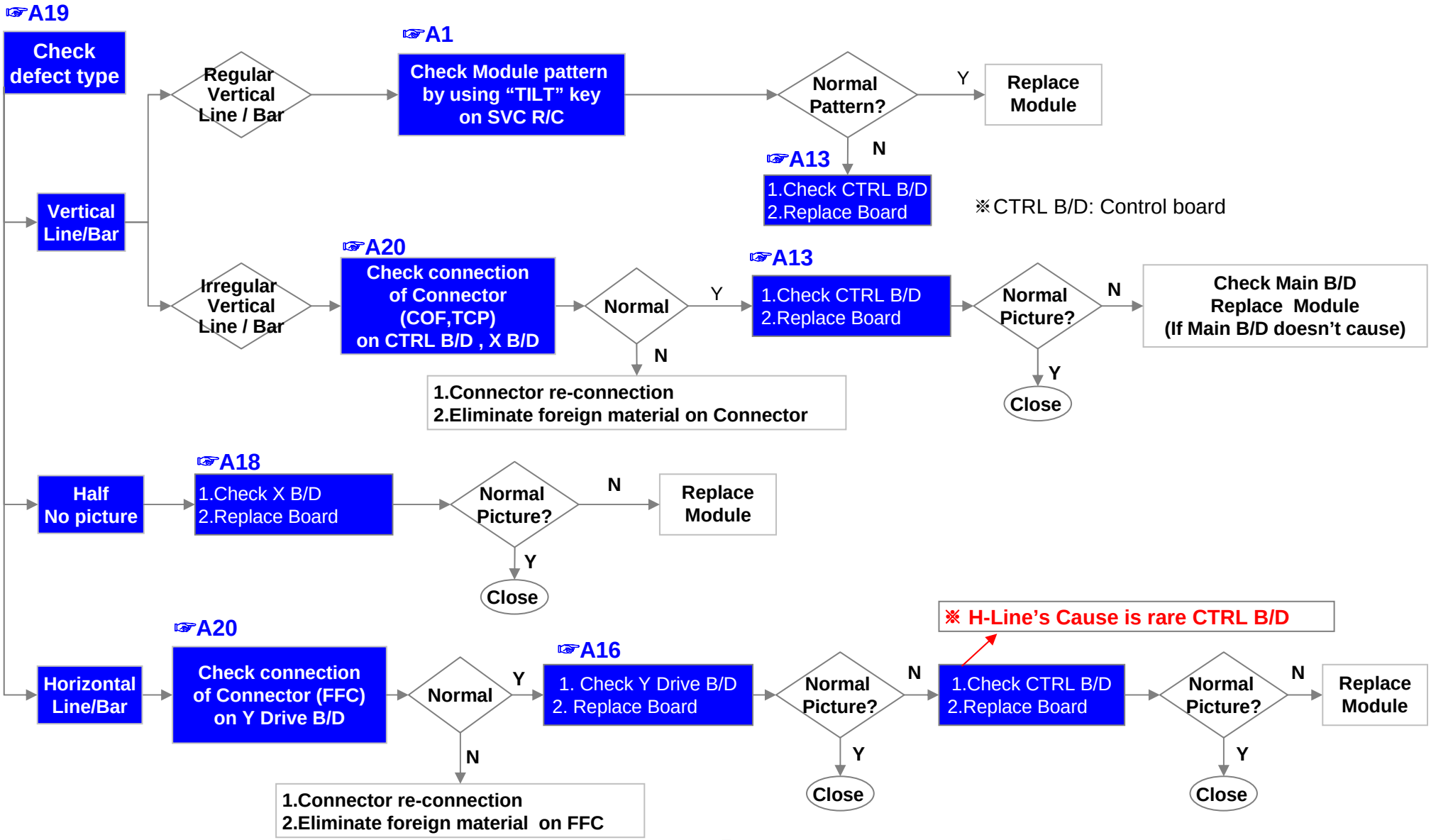

ⓒ LG Electronics. Inc.2010

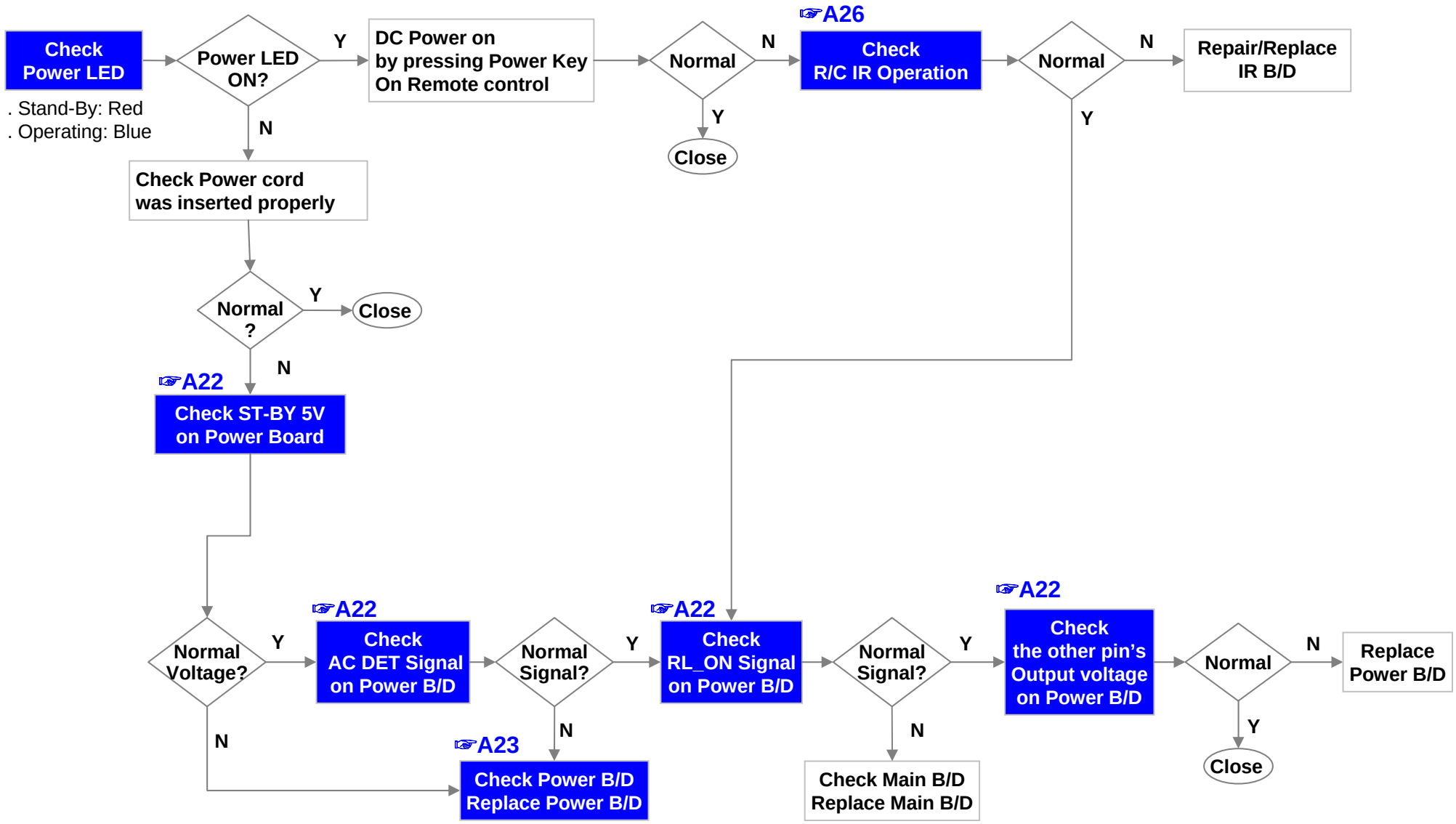

ⓒ LG Electronics. Inc.2010

※ To check Power B/D Protection

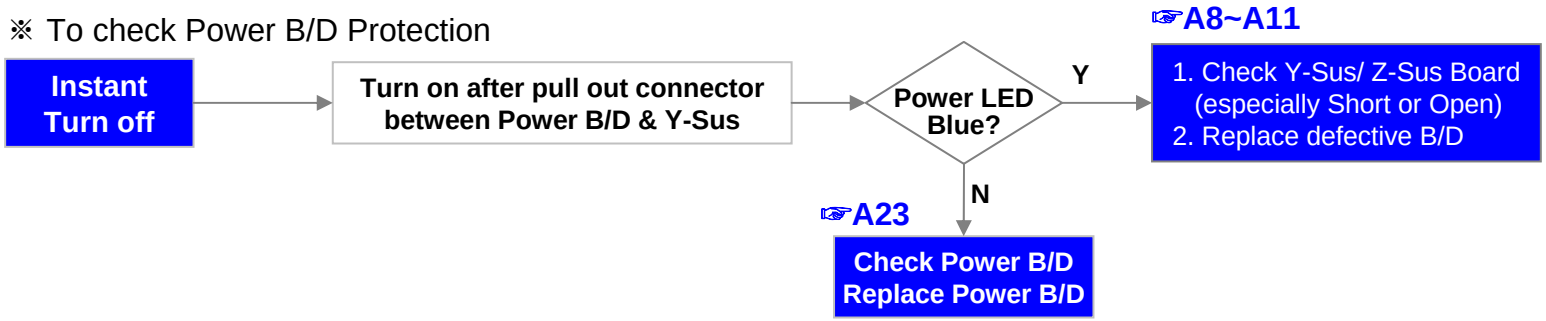

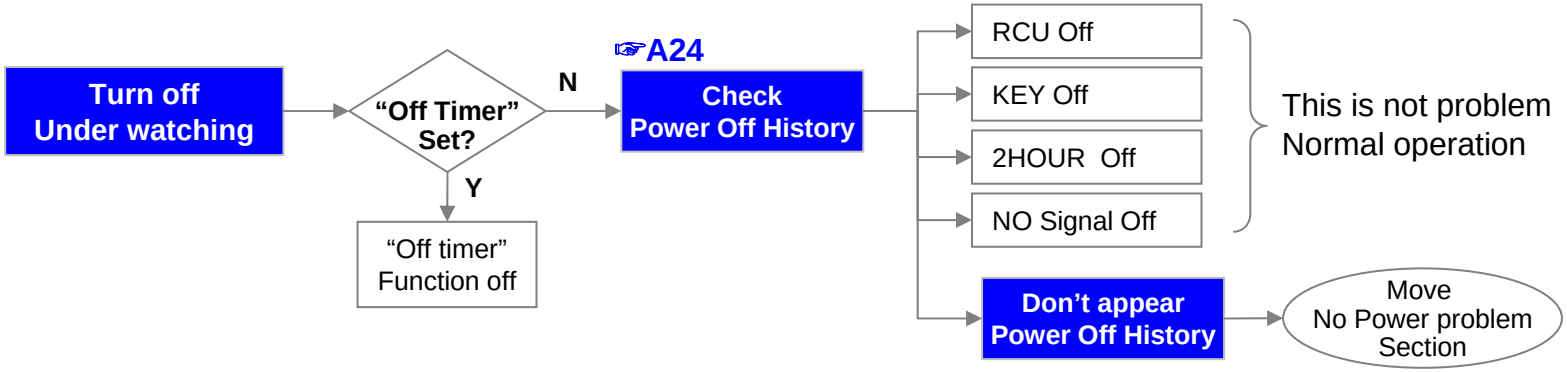

ⓒ LG Electronics. Inc.2010

1.No sound(If HDMI Input only have no sound, upload EDID data)

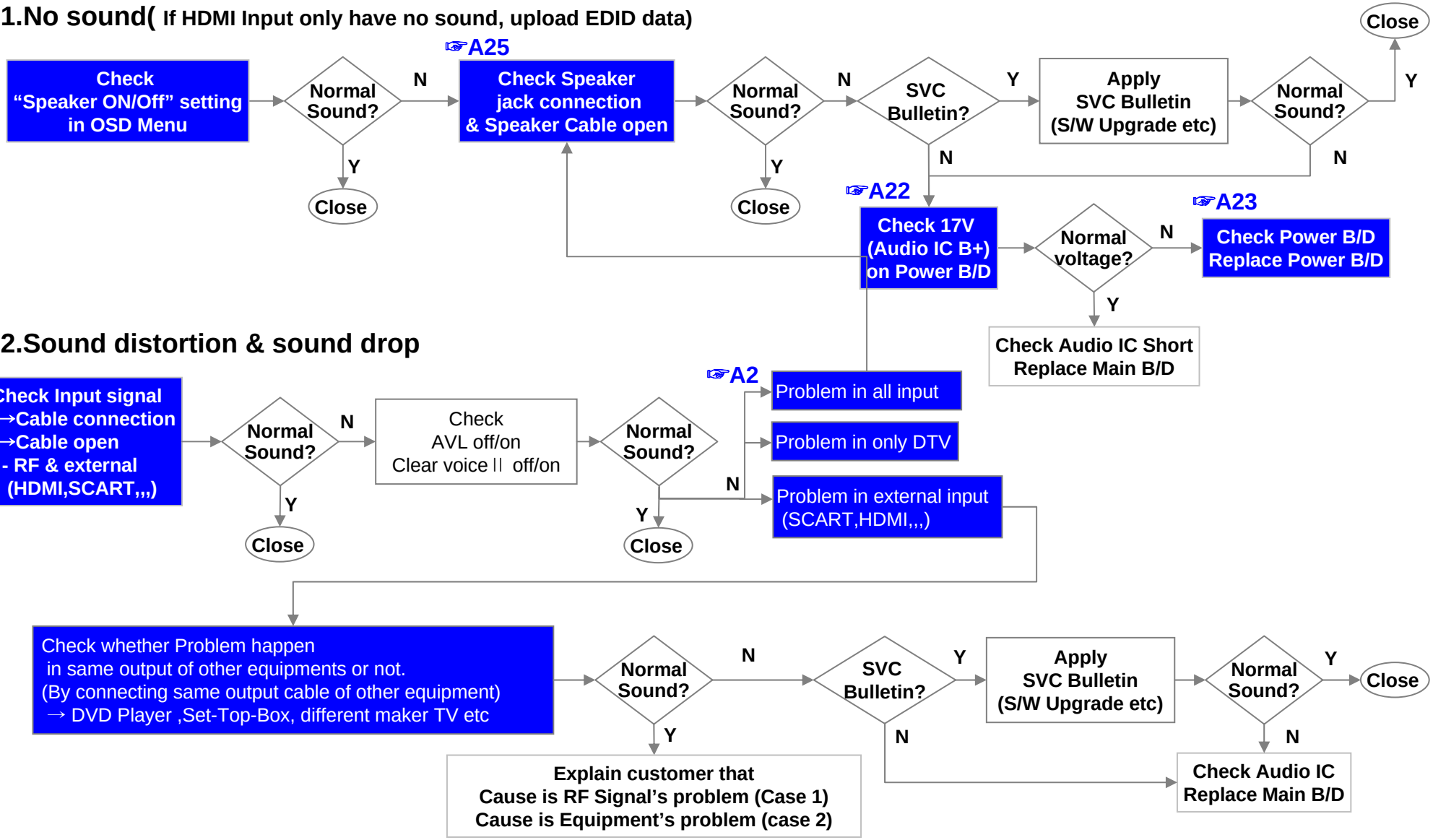

ⓒ LG Electronics. Inc.2010

1. Remote controller (R/C) operating error

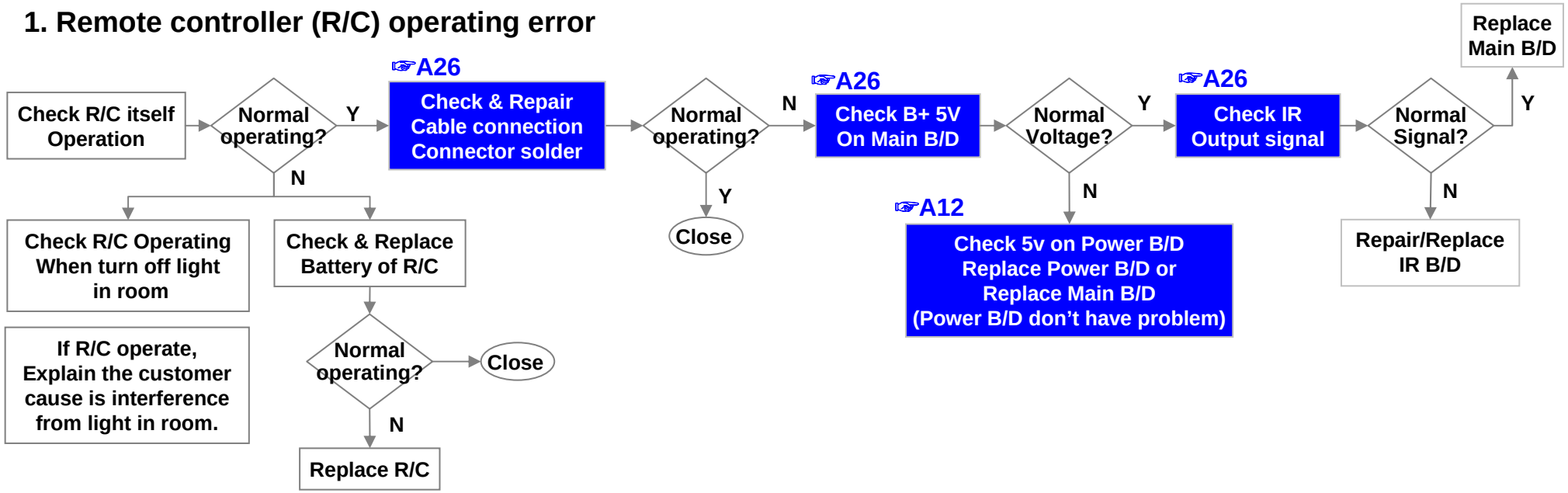

2. Local (Film Type) switch operating error

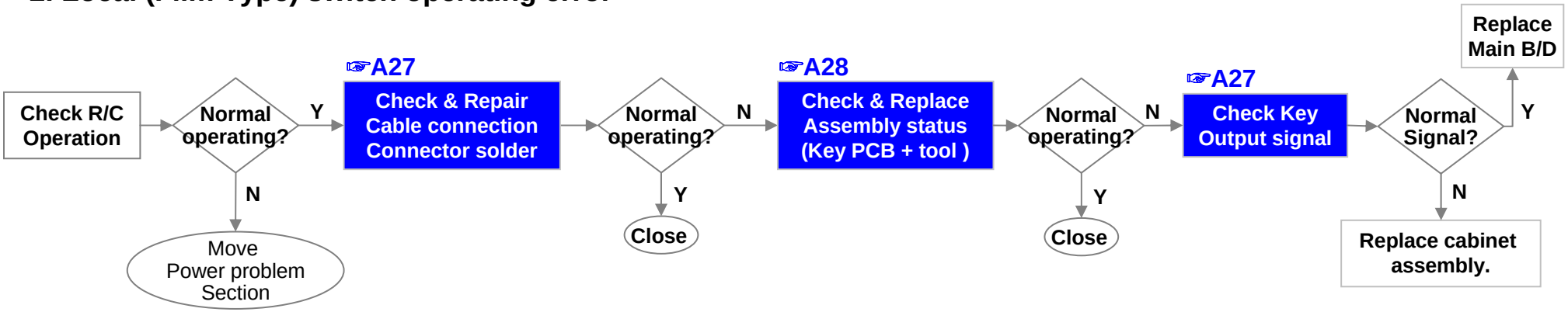

ⓒ LG Electronics. Inc.2010

PDP TV Repair Process Reference data Index

No.	Symptom	Detail	Page	Remark
1		Check Module pattern by Tilt key	A1	
2		Audio check method	A2	
3		Check Va, Vs on Power Board	A3	
4		PDP Module Label Information	A4	
5		Check & Adjust –VY,VSC,VZB voltage - 50H3 –VY,VSC(Y-Sus) / VZB(Z-Sus)	A5	
6		Video Check Method	A6	
6	Picture Problem	Fuse Checking Method	A7	
7		Y-Sus Board Checking Method(50H3)	A8	
8		Z-Sus Board Checking Method(50H3)	A9	
11		Check 5V, 12V on Power B/D	A12	
12		Control Board Checking Method(50H3)	A13	
13		Mal discharge Symptom Picture	A14	
14		PDP Module Rom Ver. Checking method	A15	
15		Y Drive B/D Checking method	A16	
16		(Half picture) X- B/D Checking method(50H3)	A18	

Next page Continued

ⓒ LG Electronics. Inc.2010

PDP TV Repair Process Reference data Index

No.	Symptom	Detail	Page	Remark
17	Picture Problem	Defect type cause by PDP Module	A19	
18		Connector Type on PDP Module	A20	
19		RF Signal level Checking method	A21	
20	Power Problem	Check voltage on Power board	A22	
21		Power board Checking Method	A23	
22		Check Power off History	A24	
23	Sound Problem	Speaker cable checking method	A25	
24	General Function Problem	Check Remote control IR operation	A26	
25		Check Local Key operation	A27	
26		Check Local switch assembly status	A28	

ⓒ LG Electronics. Inc.2010

Repair Process-Reference data

PDP TV	Symptom	A. Picture Problem	Making	2010. 12 . 24	전자 - 6-2
	Item	Check Module pattern by Tilt key	Revision		A1

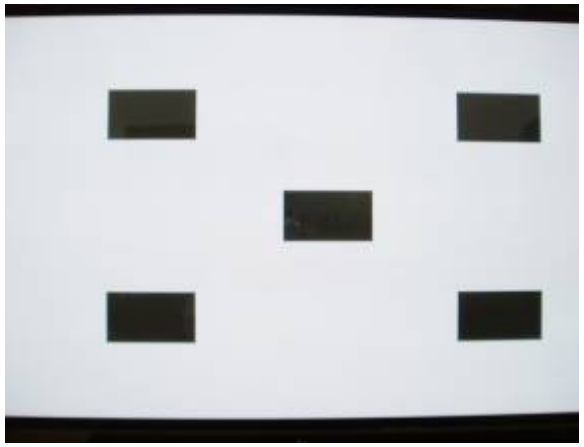

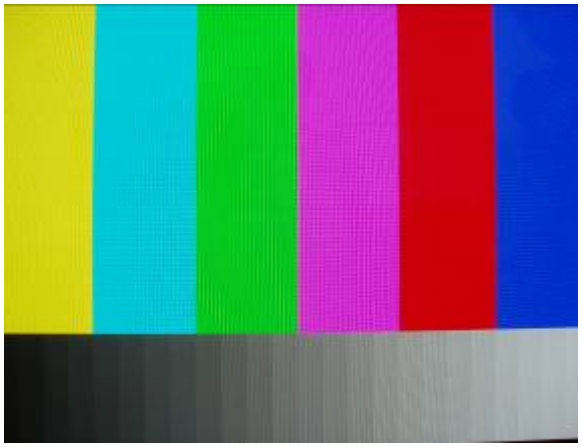

You can see 20 types patterns by using TILT Key on SVC Remote controller (except Old model)

< CHECK Item >

1. Dead pixel 2.Image sticking 3.Mal discharge 4.Module defect (V-Line/Bar, H-Line/Bar,,,)

5. In case of no picture, you can judge defect cause (Module or Main B/D)

- If patterns appear, defect cause is Main B/D

ⓒ LG Electronics. Inc.2010

PDP TV	Symptom	A. Picture Problem	Making	2010. 12 . 24	전자 - 6-2
		Audio check method	Revision		A2

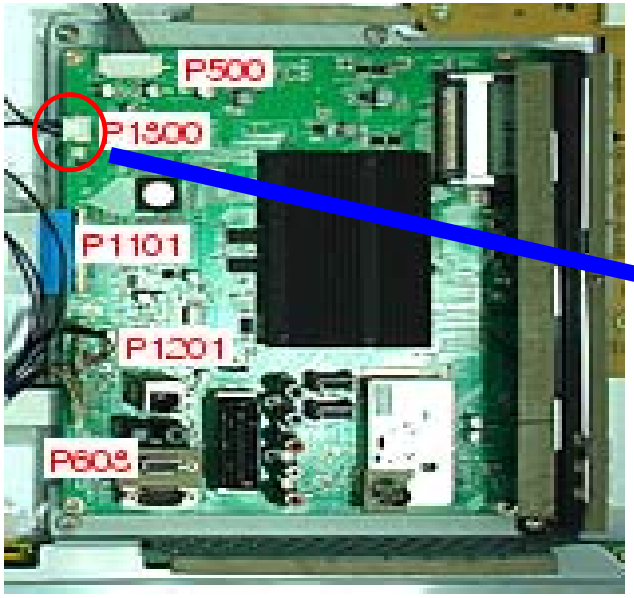

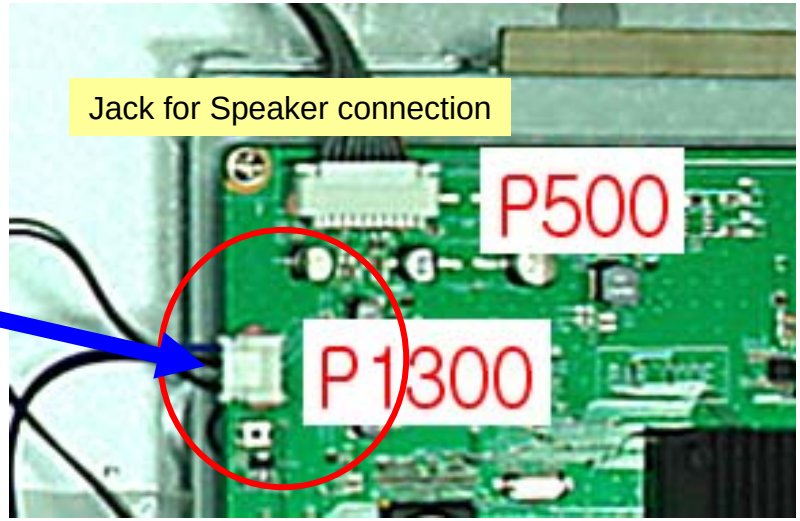

1.Check Audio output by using oscilloscope
GND ↔ R- or R+ or L- or L+

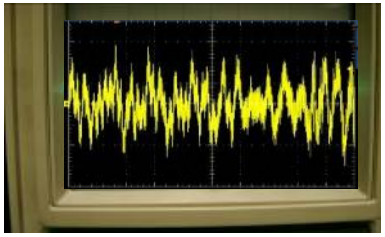

Audio output waveform

2.Check whether speaker jack was inserted properly or not.

ⓒ LG Electronics. Inc.2010

Repair Process-Reference data

PDP TV	Input Block	All Input Audio Problem	Making	2010. 12 . 24	전자 - 6-2
			Revision		A2-1

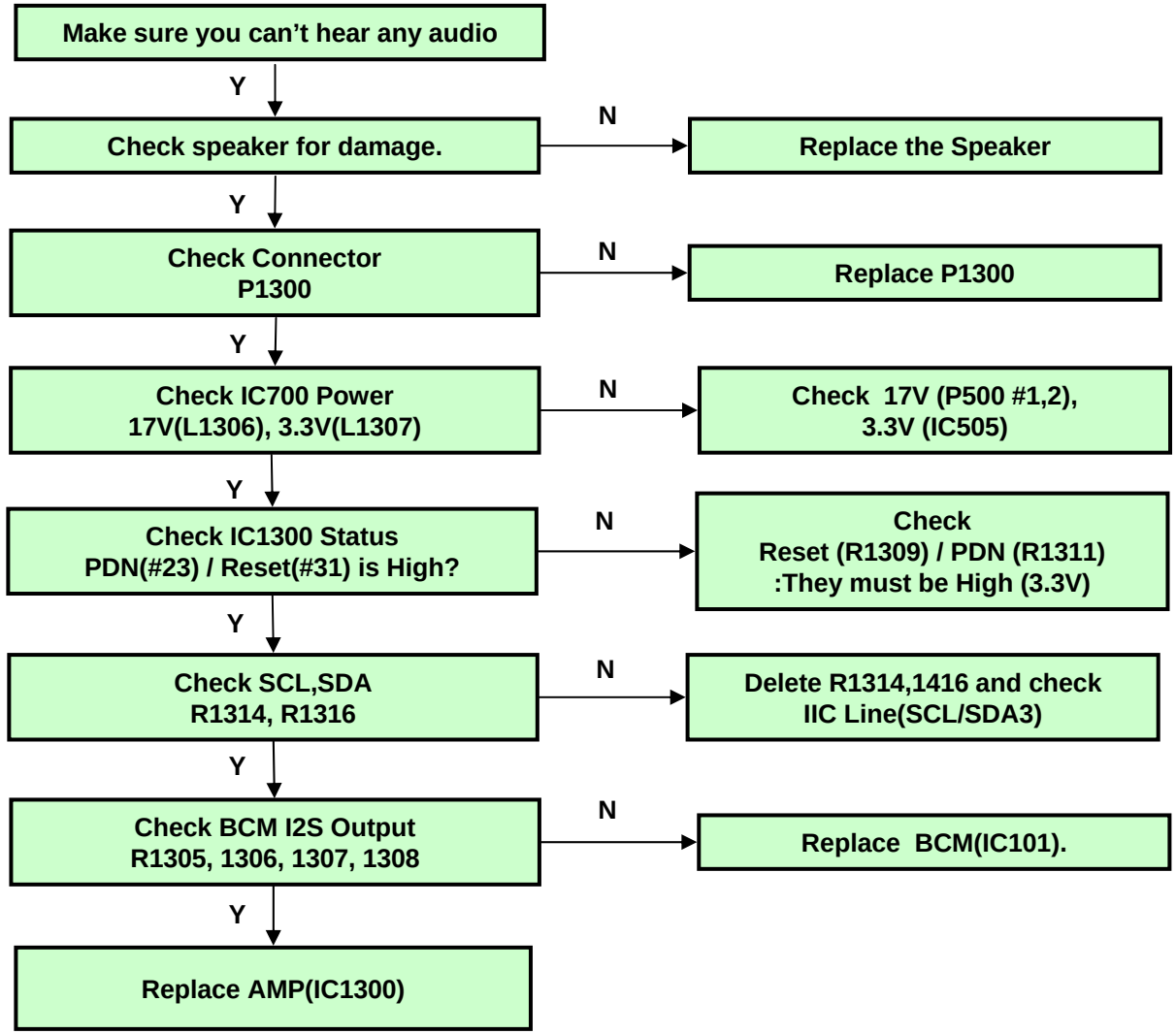

ⓒ LG Electronics. Inc.2010

PDP TV	Input Block	Digital TV / HDMI Audio Problem	Making	2010. 12 . 24	전자 - 6-2
			Revision		A2-2

◆ Digital TV

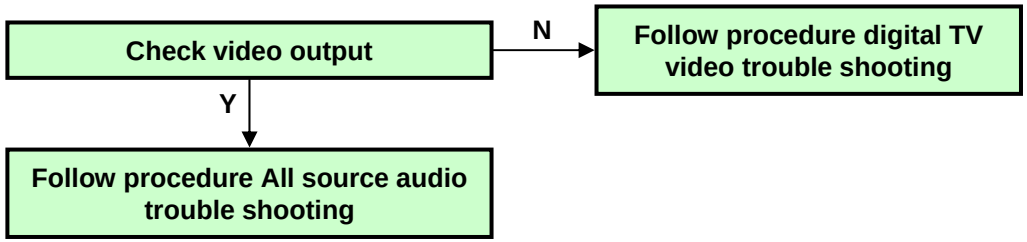

◆ HDMI

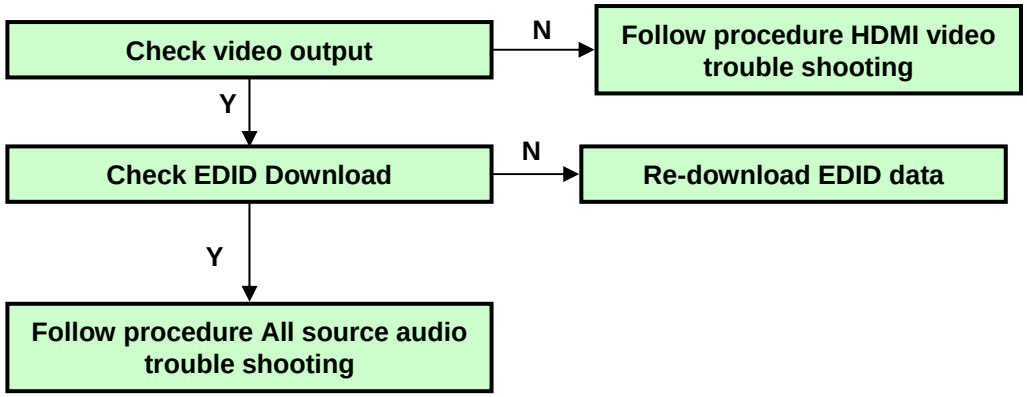

ⓒ LG Electronics. Inc.2010

PDP TV	Input Block	Analog TV Audio Problem	Making	2010. 12 . 24	전자 - 6-2
			Revision		A2-3

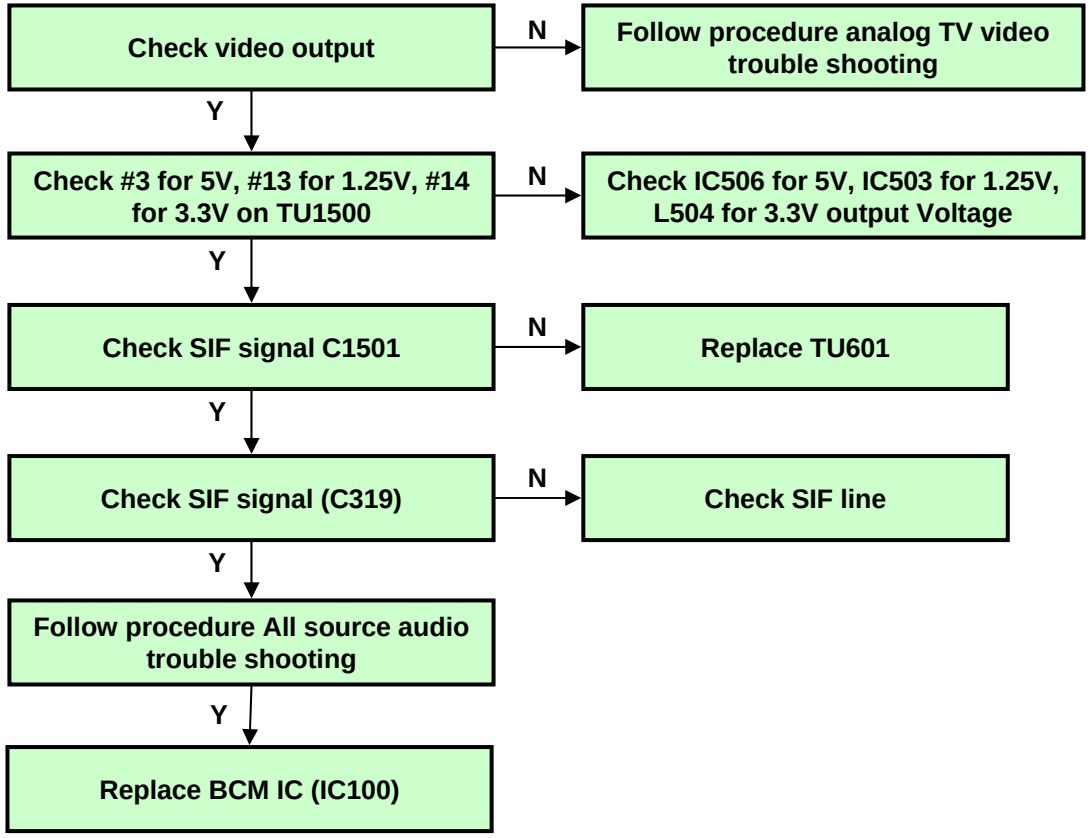

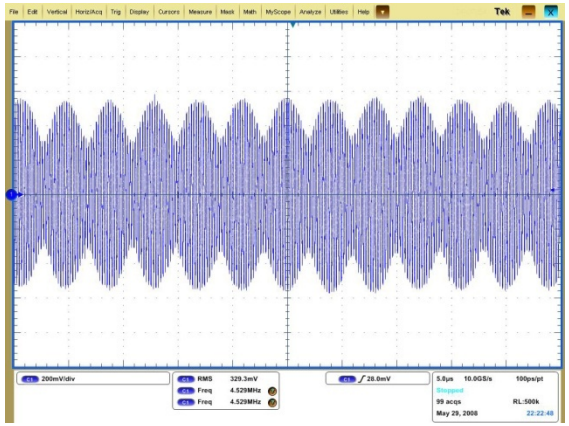

< SIF waveform – sample >
- Defend on the input signal.

ⓒ LG Electronics. Inc.2010

Repair Process-Reference data

PDP TV	Input Block	Component / AV/RGB Audio Problem	Making	2010. 12 . 24	전자 - 6-2
			Revision		A2-4

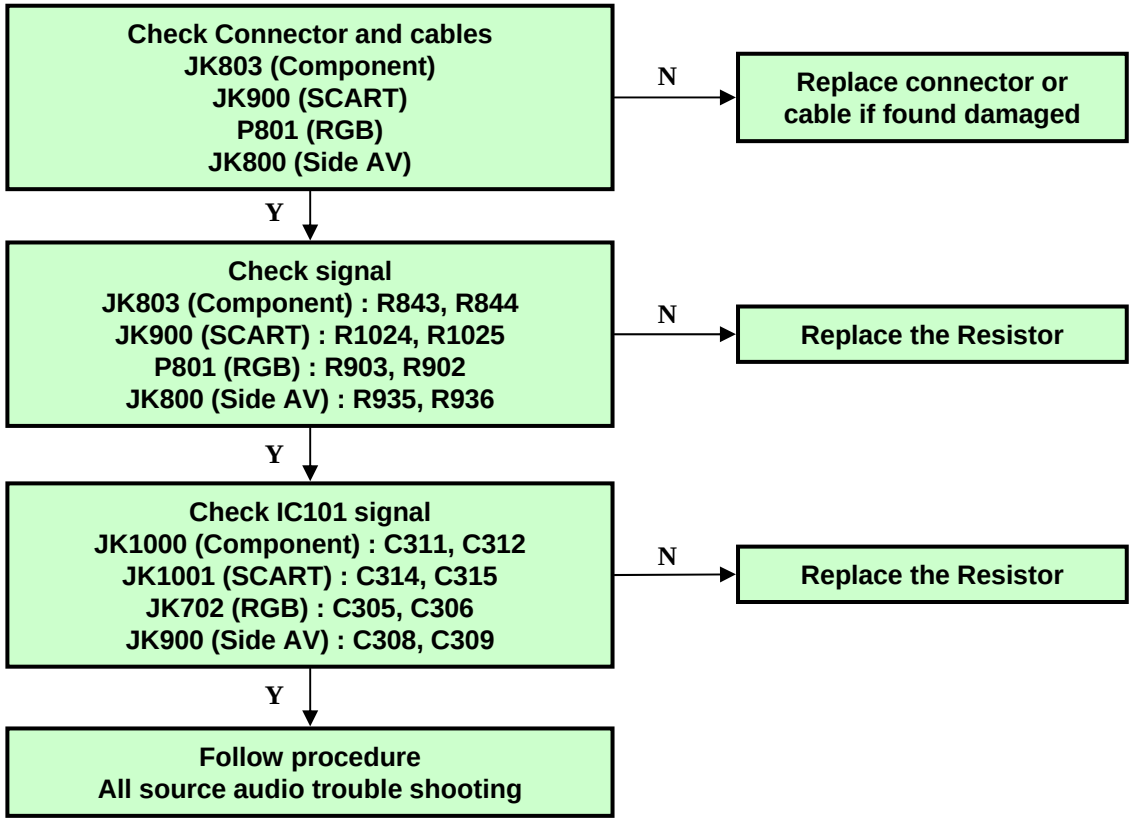

ⓒ LG Electronics. Inc.2010

PDP TV	Input Block	Optical Audio Problem	Making	2010. 12 . 24	전자 - 6-2
			Revision		A2-5

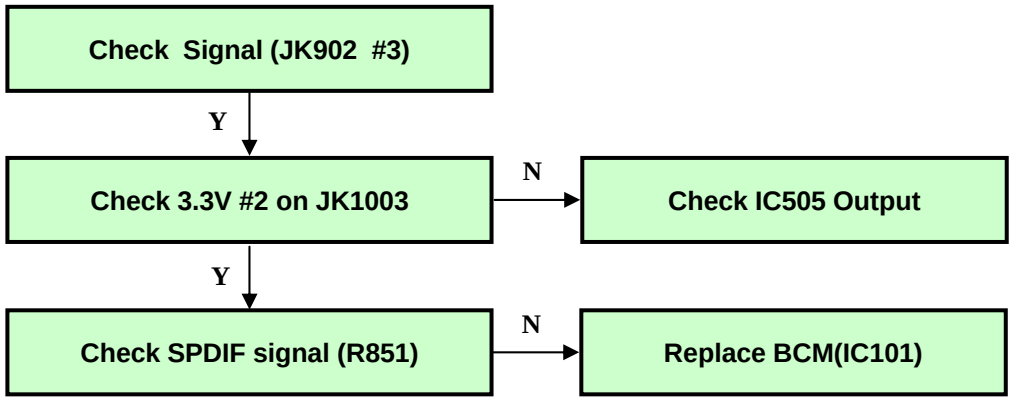

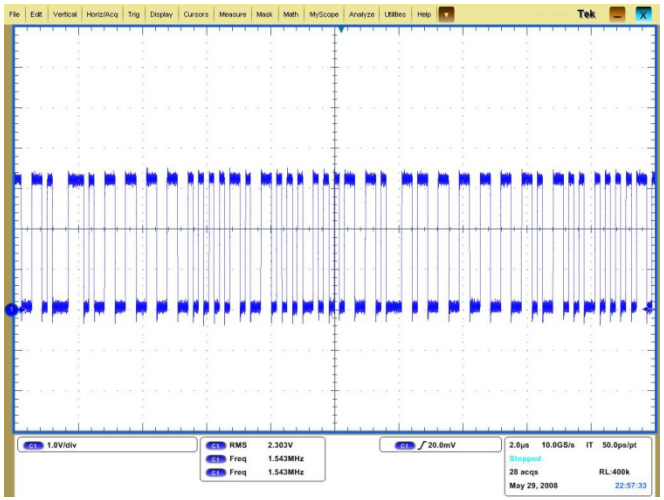

< SPDIF waveform – sample >
- Defend on the input signal.

ⓒ LG Electronics. Inc.2010

Repair Process-Reference data

PDP TV	Symptom	A. Picture Problem	Making	2010. 12 . 24	전자 - 6-2
		Check Va, Vs on Power Board	Revision		A3

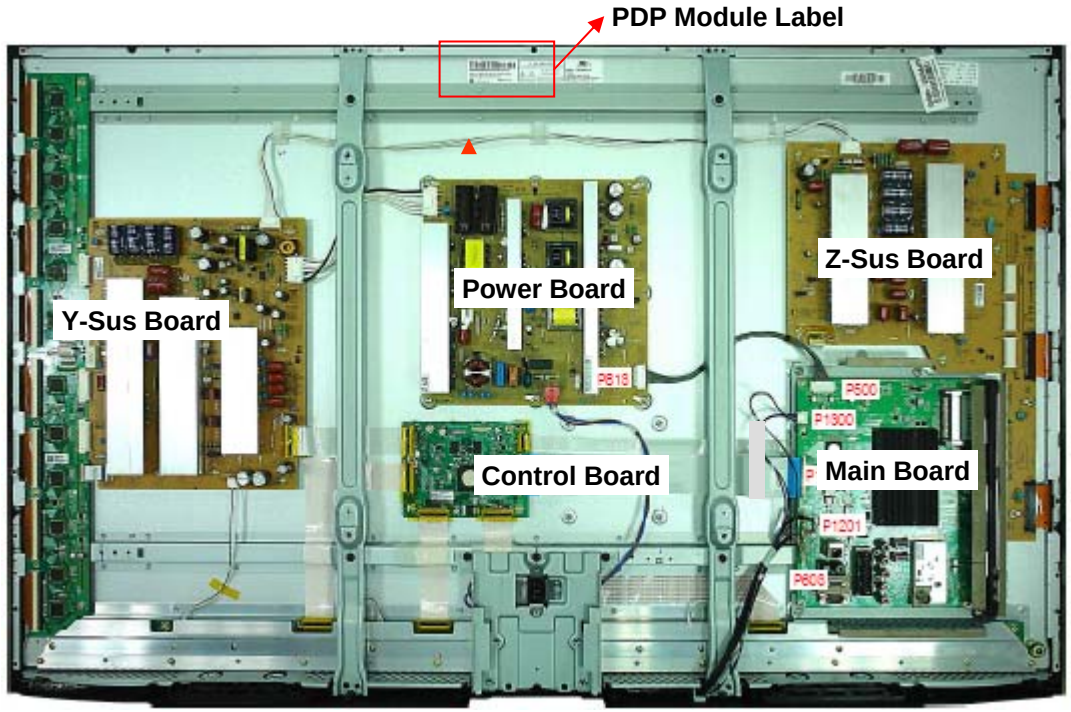

▶ **Check Va & Adjust Va Voltage**
(Refer to the Module label for Va specification)

▶ **Check Vs & Adjust Vs Voltage**
(Refer to the Module label for Vs specification)

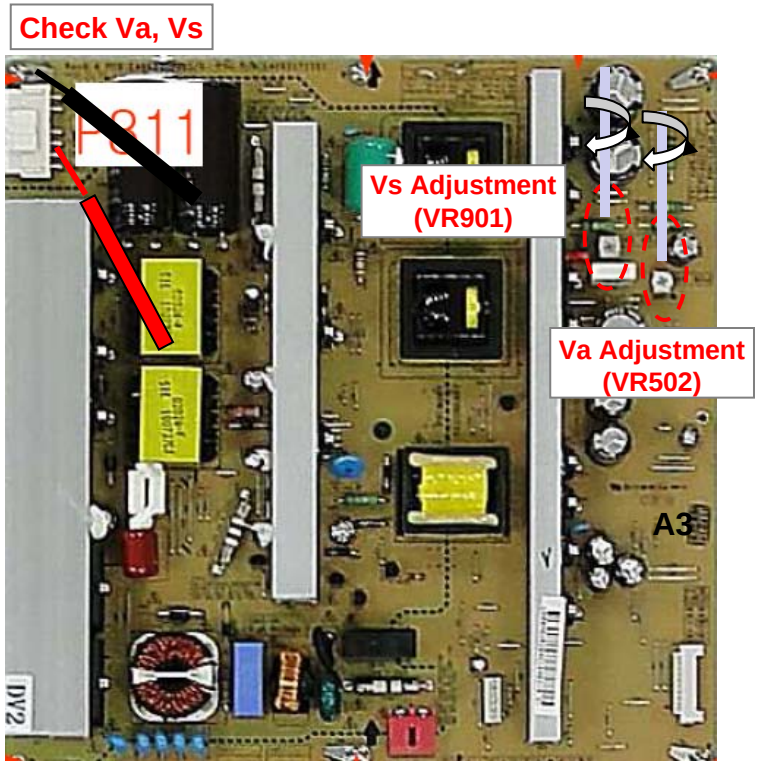

ⓒ LG Electronics. Inc.2010

PDP Module Label Information.

① Model Name

② Bar Code
(Code 128, Contains the manugacture No.)

③ Manugacture No.

④ Adjusting Voltage(DC Va, Vs)

⑤ Adjusting Voltage (Set up/-Vy/Vsc/Ve/Vzb)

⑥ The trade name of LG Electronics

⑦ Manufactured date(Year & Month)

⑧ Warning

⑨ UL Approval Mark

⑩ UL Approval No.

⑪ Model Name

⑫ Max. Watt

⑬ Max. Volts

⑭ Max. Amps

ⓒ LG Electronics. Inc.2010

Voltage Check & Adjustment : 50R3

<Module Label>

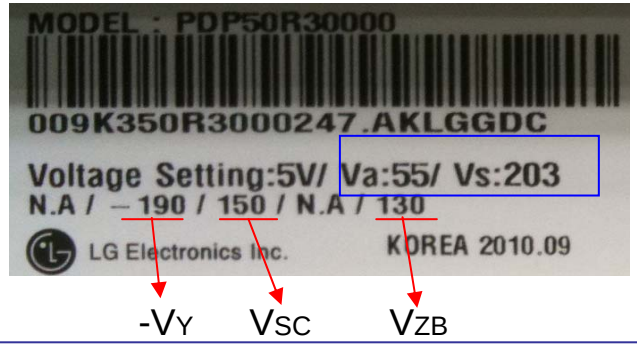

1. Vsc (150V) on Y-Sus B/D
   - Check Point: R324
   - Adjustment Point: VR301

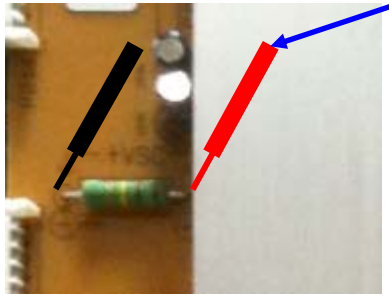

2. -Vy (-190V) on Y-Sus B/D
   - Check Point: R334
   - Adjustment Point: VR302

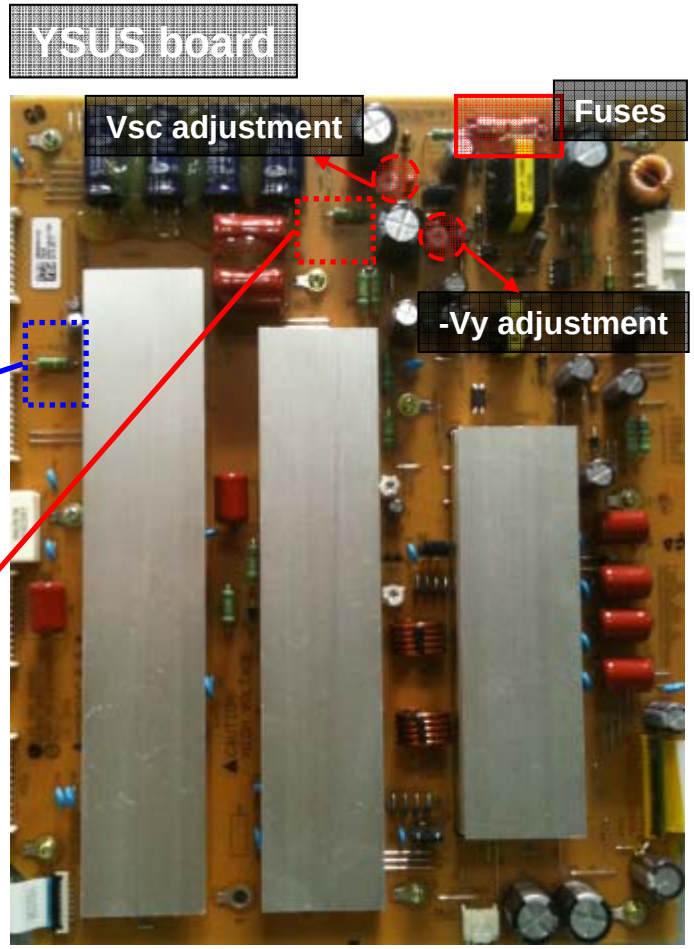

ⓒ LG Electronics. Inc.2010

Voltage Check & Adjustment : 50R3

<Module Label>

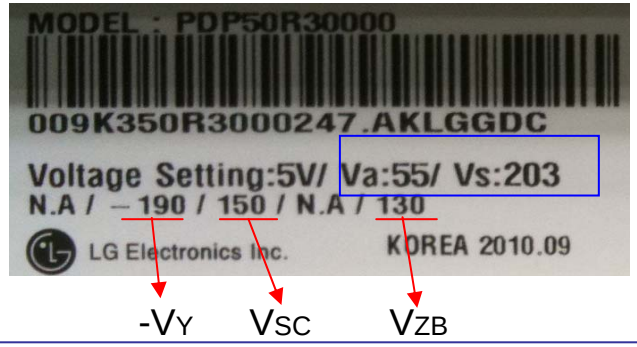

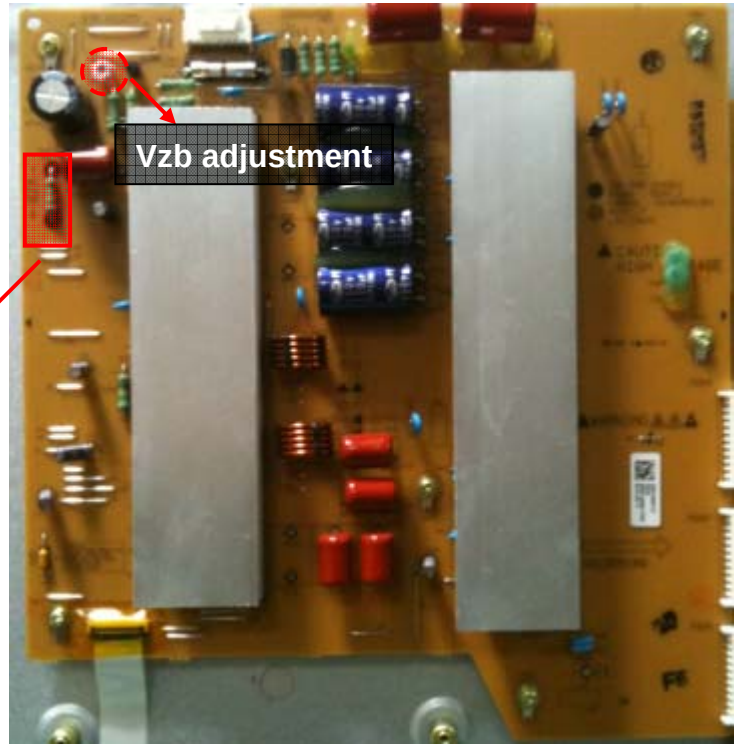

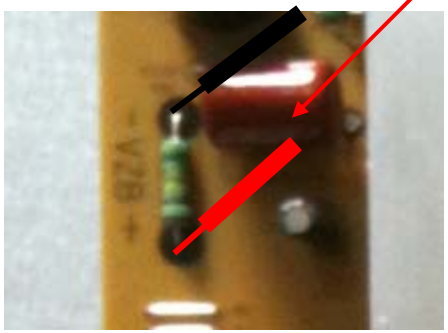

3. VZB (115V) on Z-Sus B/D
   . Check Point: R156
   - Adjustment Point: VR204

ⓒ LG Electronics. Inc.2010

PDP TV	Input Block	Digital TV Video Problem	Making	2010. 12 . 24	전자 - 6-2
			Revision		A6-1

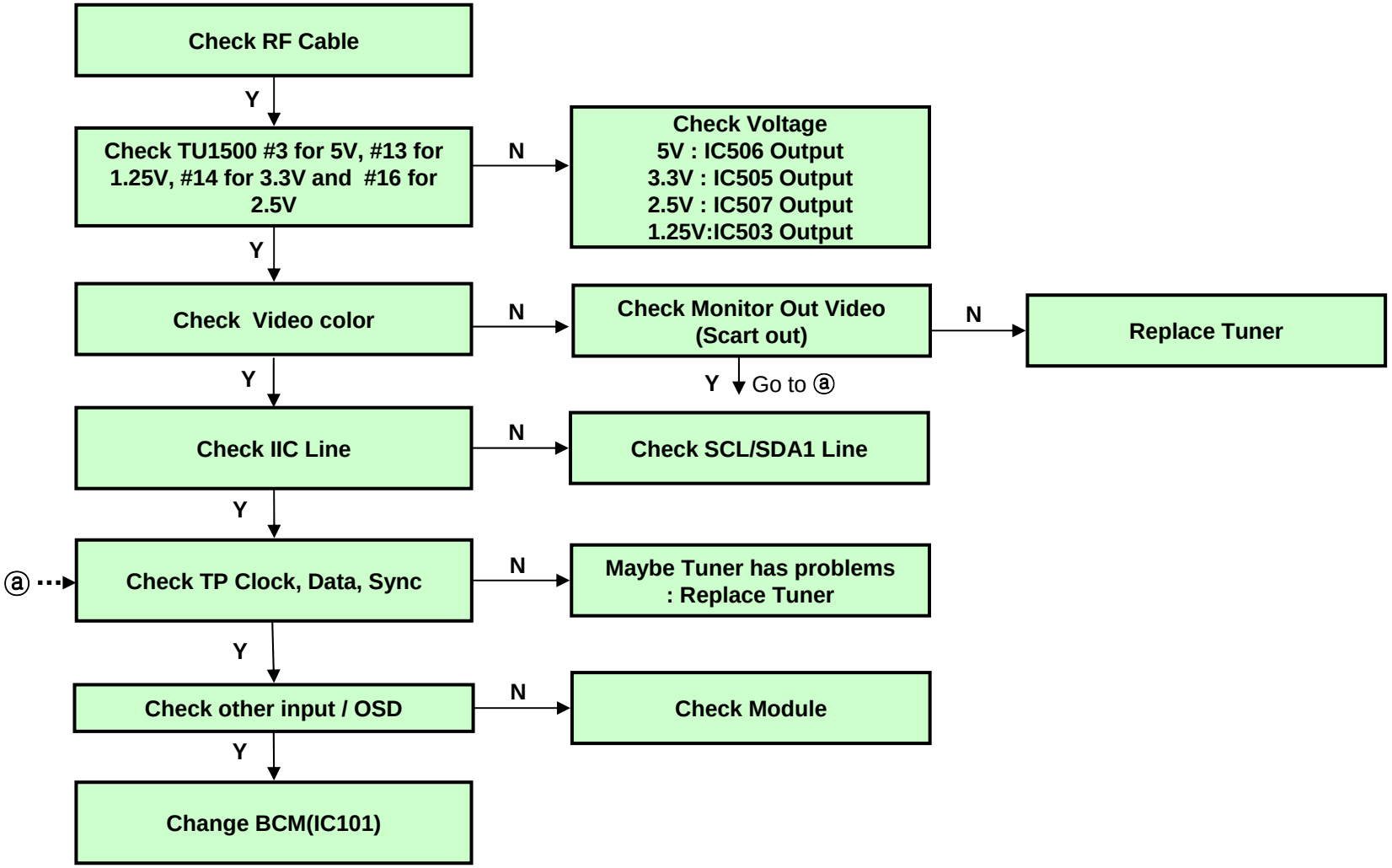

ⓒ LG Electronics. Inc.2010

PDP TV	Input Block	Analog TV Video Problem	Making	2010. 12 . 24	전자 - 6-2
			Revision		A6-2

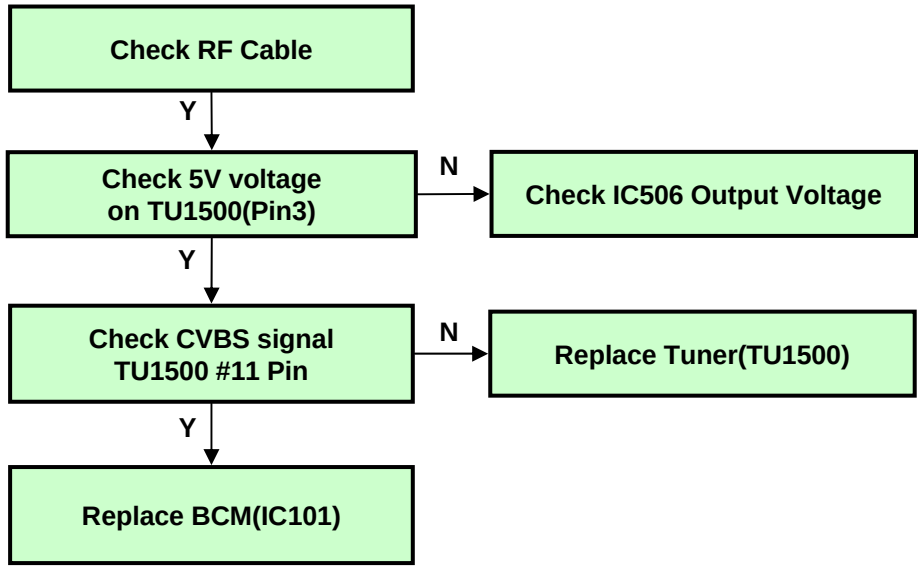

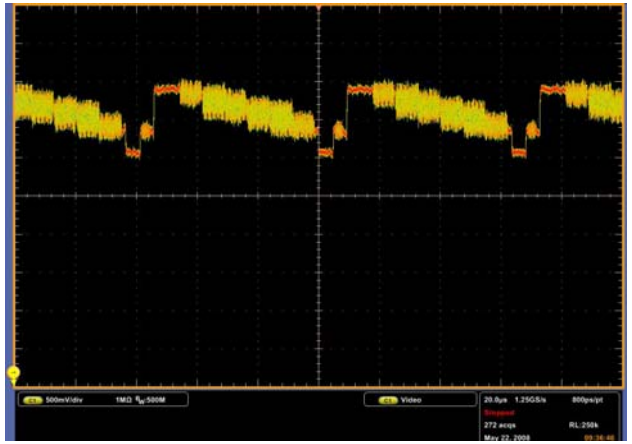

< CVBS waveform – sample >
- Defend on the input signal.

ⓒ LG Electronics. Inc.2010

PDP TV	Input Block	Component Video Problem	Making	2010. 12 . 24	전자 - 6-2
			Revision		A6-3

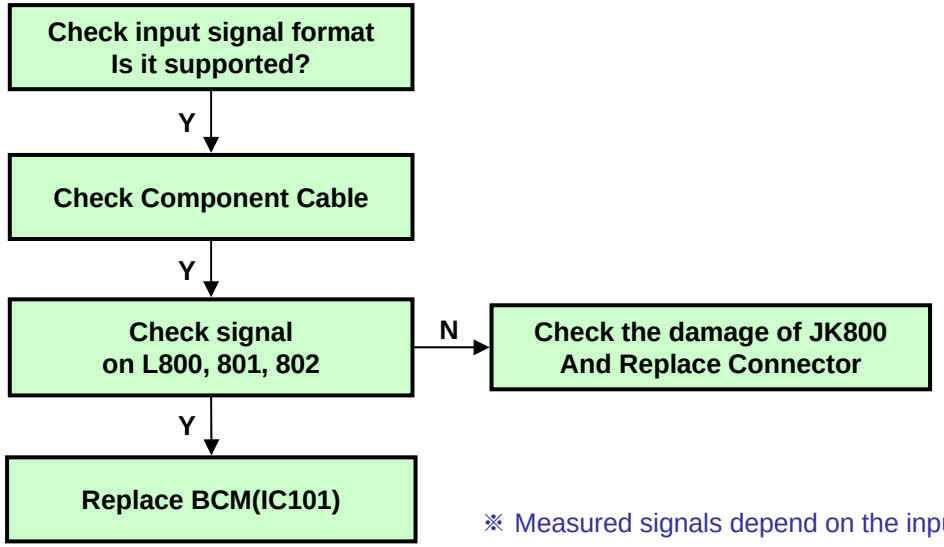

※ Measured signals depend on the input signal.

ⓒ LG Electronics. Inc.2010

PDP TV	Input Block	RGB(D-Sub) Video Problem	Making	2010. 12 . 24	전자 - 6-2
			Revision		A6-4

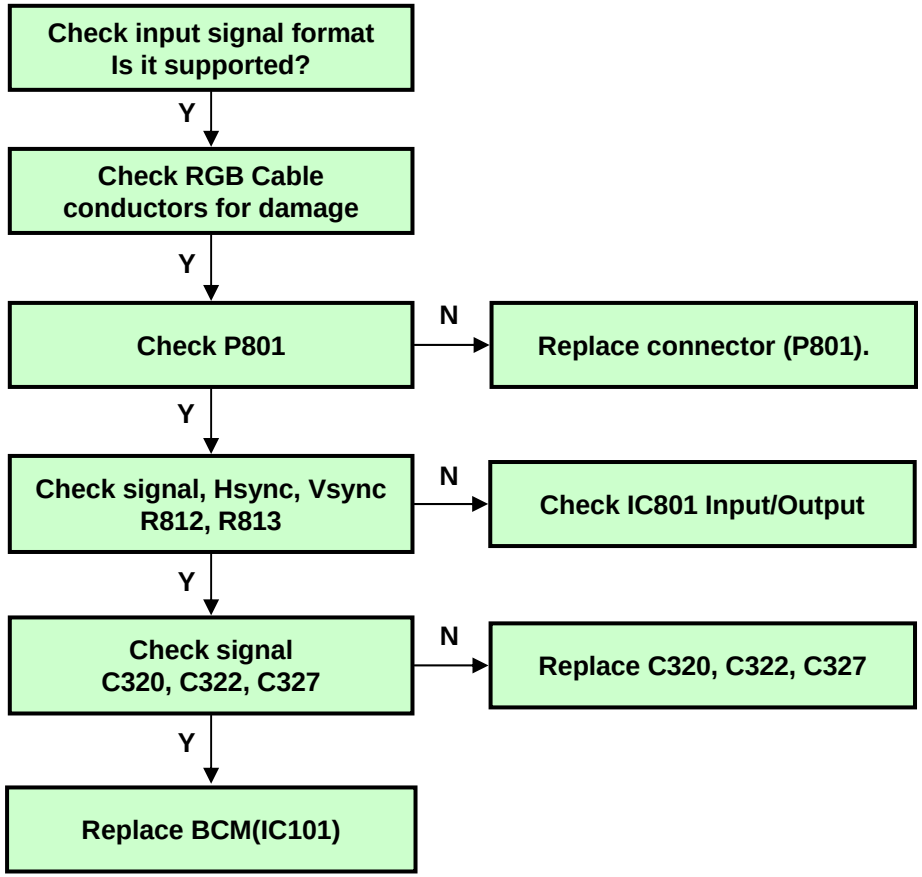

※ Measured signals depend on the input signal.

ⓒ LG Electronics. Inc.2010

PDP TV	Input Block	AV Video Problem	Making	2010. 12 . 24	전자 - 6-2
			Revision		A6-5

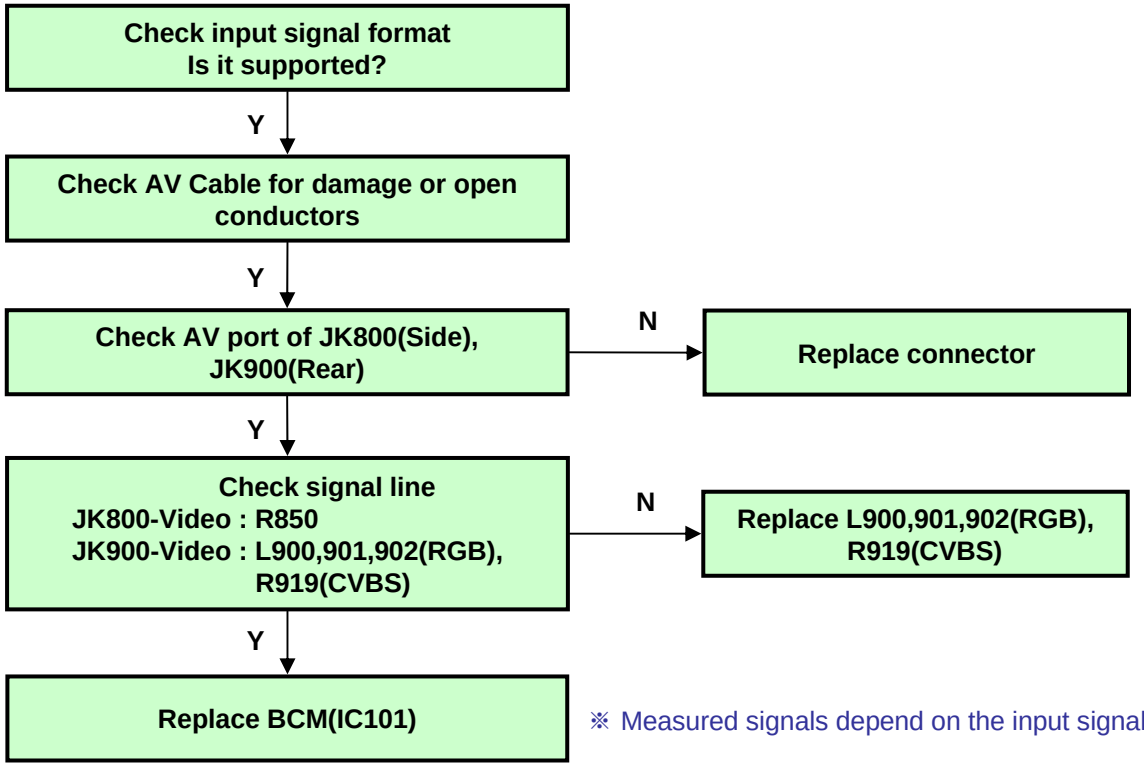

※ Measured signals depend on the input signal.

ⓒ LG Electronics. Inc.2010

PDP TV	Input Block	HDMI Video Problem	Making	2010. 12 . 24	전자 - 6-2
			Revision		A6-6

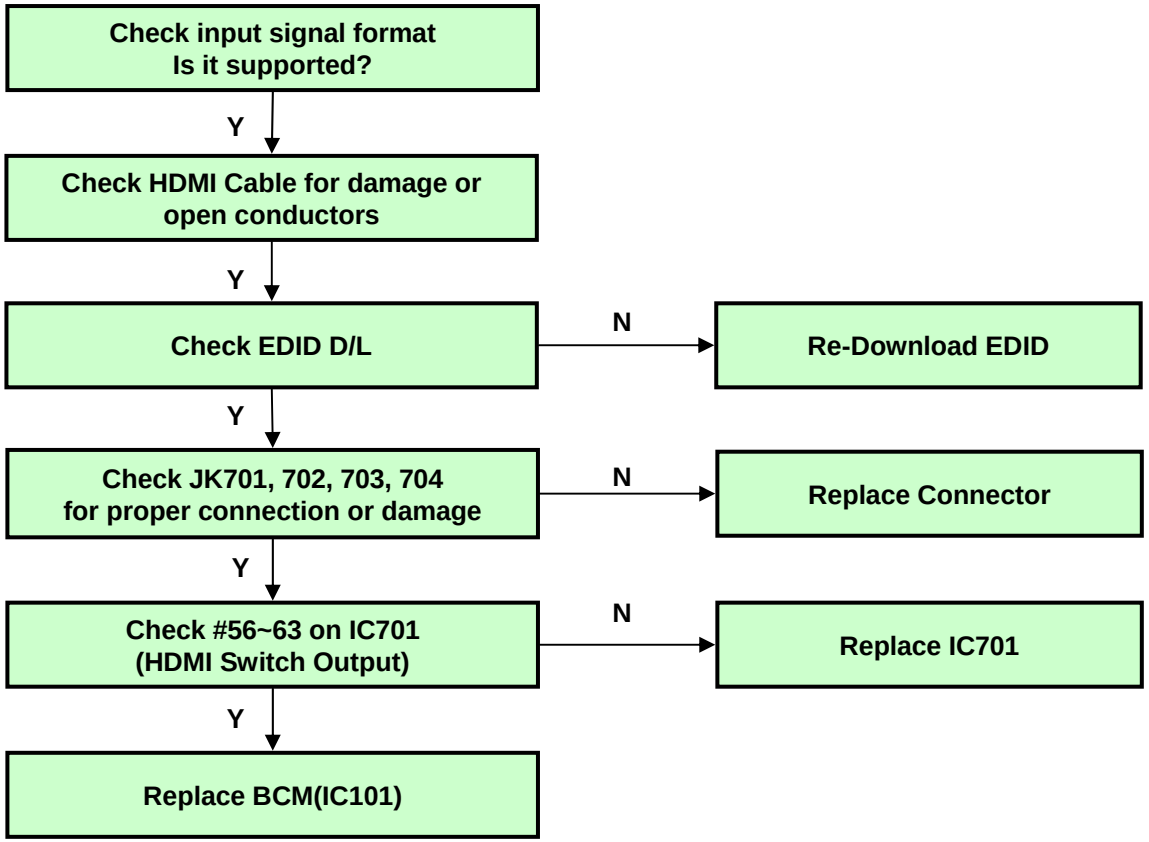

ⓒ LG Electronics. Inc.2010

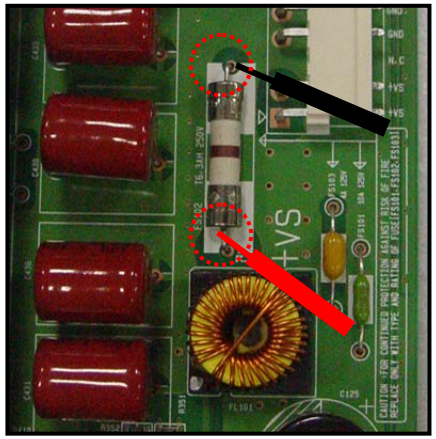

Pic. 1. Fuse check

Pic. 1.

< DMM mode >

Pic. 2.

1) Sound comes, the fuse is OK.
2) If Fuse is defects, it should check again voltage of 5V, Va, Va after replacing the fuse.
3) In case there are no voltage of 5V, Va, Vs, the board is failure, it need to replace the board.

ⓒ LG Electronics. Inc.2009

PDP TV	Symptom	A. Picture Problem	Making	2010. 12 . 24	전자 - 6-2
		Y-Sus Board Checking Method(50H3)	Revision		A8

▣ Check Method

① Check input voltages(5V, Va, Vs) at P103 connector.
② Check it is short or not between Vs and GND at P103 connector.
③ Check all of fuses open. (FS201, FS202, FS203, FS501)
④ Check voltage of diode , FET by using digital multi-meter.

▣ Measurement method

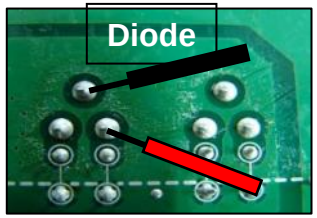

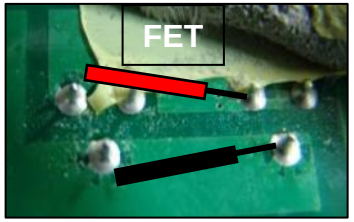

▣ Specifications

Position	Direction	Circuit No.		
HS601		D610	Q606,Q607	Q608,Q609
	Forward	0.35V ~ 0.45V	0.45V~0.55V	0.45V~0.55V
	Reverse	O.L. (Overload)		
HS602		D604,D605	Q601,Q602	
	Forward	0.35V ~ 0.45V	0.45V~0.55V	
	Reverse	O.L. (Overload)		
HS603		D602	Q603,Q605	Q610,Q612
	Forward	0.35V ~ 0.45V	0.35V ~ 0.45V	0.4V~0.5V
	Reverse	O.L. (Overload)		

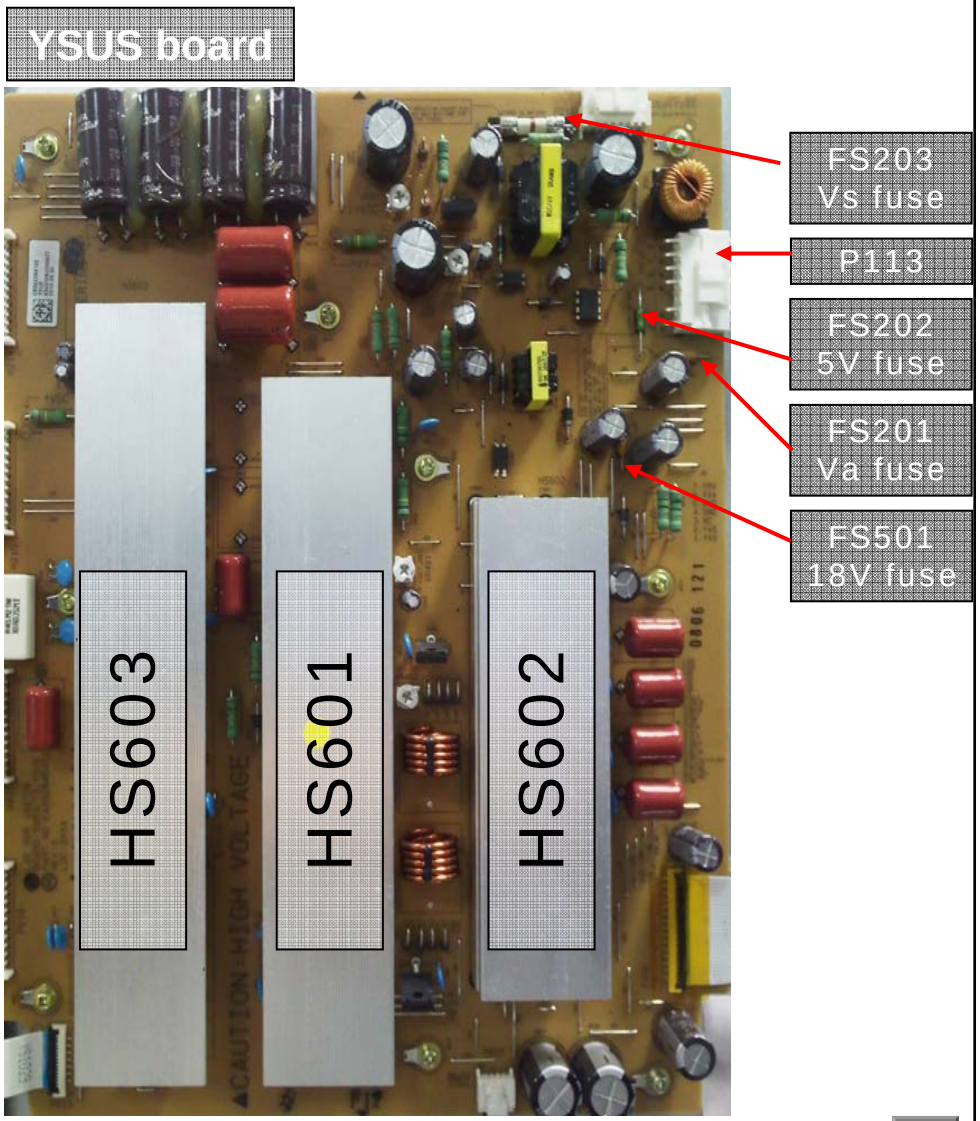

ⓒ LG Electronics. Inc.2009

PDP TV	Symptom	A. Picture Problem	Making	2010. 12 . 24	전자 - 6-2
		Z-Sus Board Checking Method(50R1)	Revision		A9

① Check input voltages(5V, Va, Vs) at P203 connector.
② Check it is short or not between Vs and GND at P203 connector.
③ Check all of fuses open. (FS202)
④ Check voltage of diode , FET by using digital multi-meter.

▣ Measuring Method

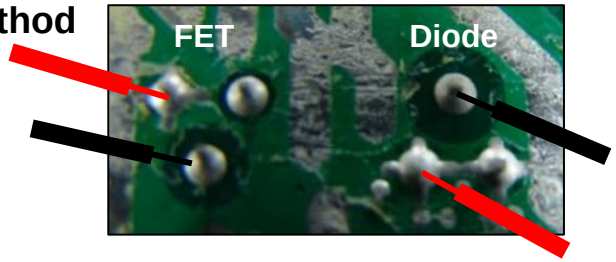

▣ Specifications

Position	Direction	Circuit No.		
HS101		D114,D118	Q107, Q110	Q106, Q109
	Forward	0.35V ~ 0.45V	0.35V ~ 0.45V	0.35V ~ 0.45V
	Reverse	O.L. (Overload)		
HS102		D109,D110,D108,D111	Q104,Q113,Q114	Q102,Q103
	Forward	0.35V ~ 0.45V	0.5V ~ 0.6V	0.45V~0.55V
	Reverse	O.L. (Overload)		

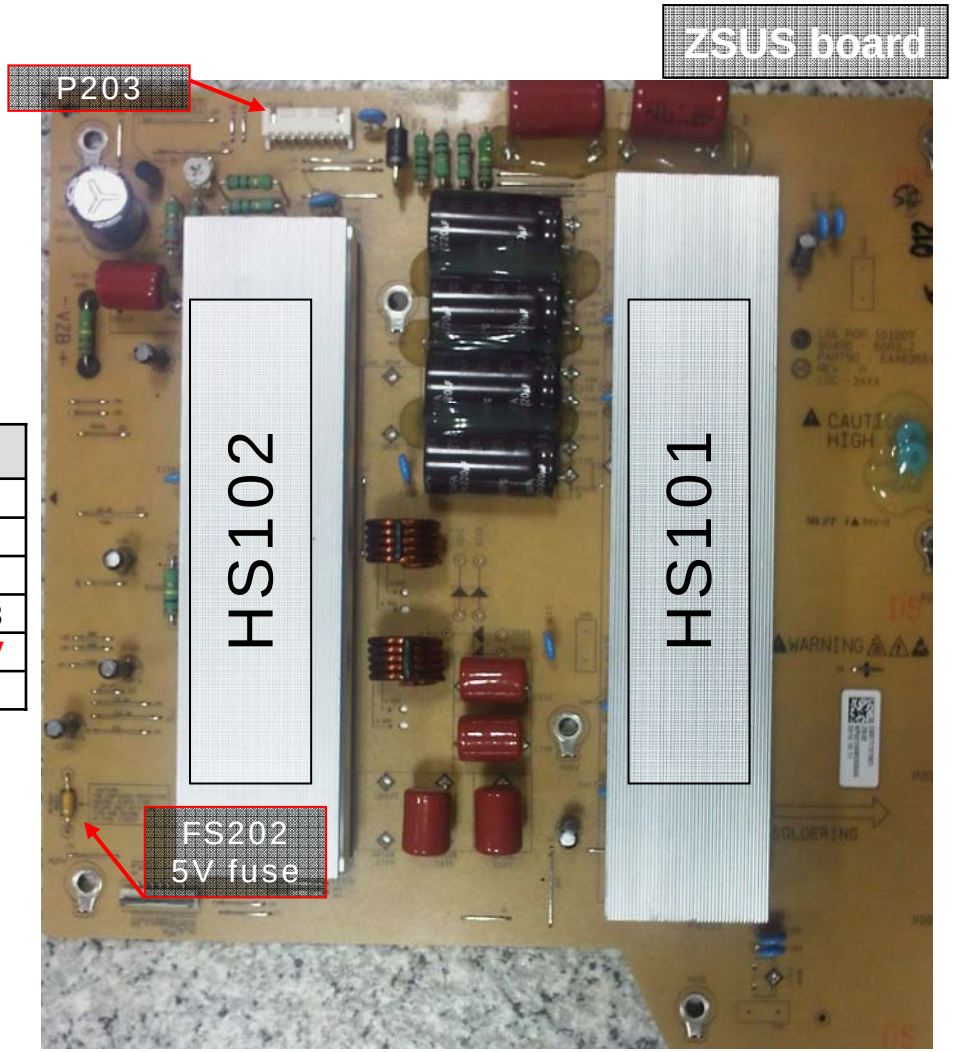

ⓒ LG Electronics. Inc.2009

Repair Process-Reference data

PDP TV	Symptom	A. Picture Problem	Making	2010. 12 . 24	전자 - 6-2
		Check 5V, 12V on Power B/D	Revision		A12

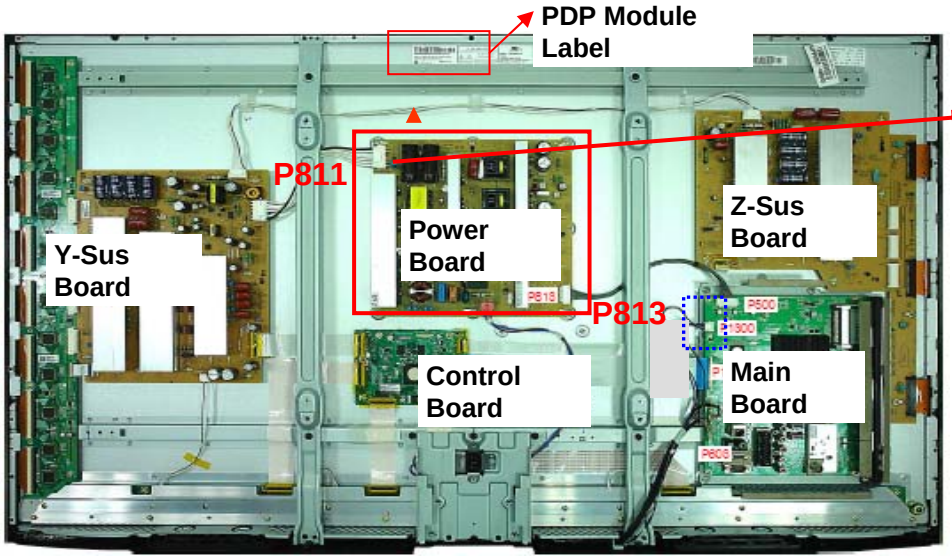

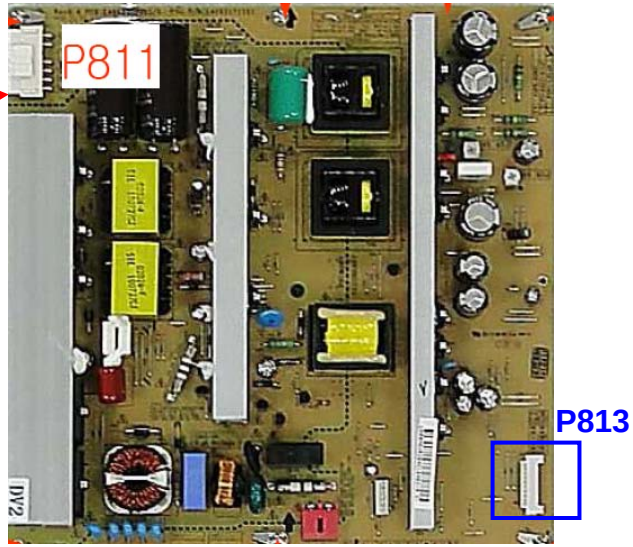

P813			
1	17V	2	17V
3	GND	4	GND
5	5V	6	5V
7	5V	8	Error_DET
9	GND	10	GND
11	GND	12	GND
13	STBY	14	STBY
15	RL_ON	16	AC DET
17	M_ON	18	AUTO_GND
Wafer	SMAW200-H18S2		

▣ Measure 5V voltage

▣ Measure 17V voltage

ⓒ LG Electronics. Inc.2009

Repair Process-Reference data

PDP TV	Symptom	A. Picture Problem	Making	2010. 12 . 24	전자 - 6-2
		Control Board Checking Method(50H3)	Revision		A13

▣ Checking Method

① Check input voltages(5V of P105 / 18V of P2) at control board.

② Check LED is on.

③ If LED doesn't work, check crystal X1 output.

④ Check 3.3V, 5V IC.

⑤ Check MCM at VS_DA by using digital multi meter.

④ Check IC (IC53, IC51)

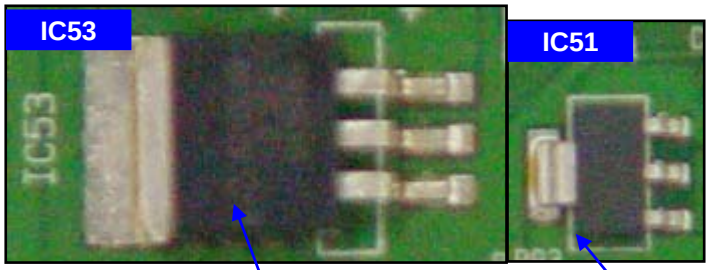

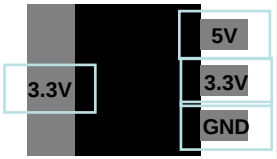

② Check LED On

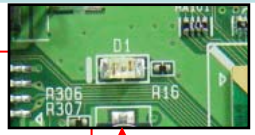

③ Check Crystal(X1)

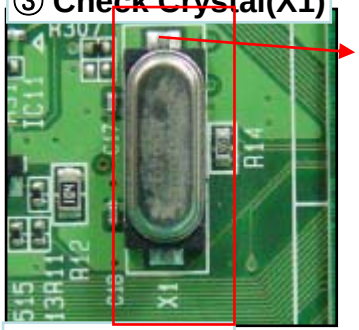

Check oscillation of Crystal
(Normal: 25 MHZ)

⑤ Check MCM

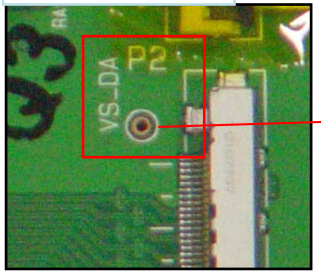

MCM Check point
(+)VS_DA / (-) GND
(Normal: 3.3V)

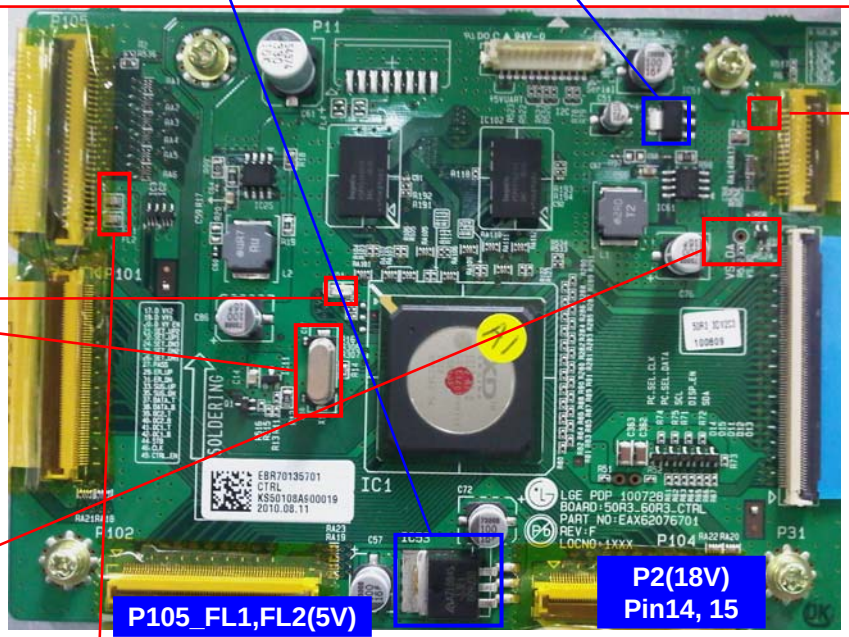

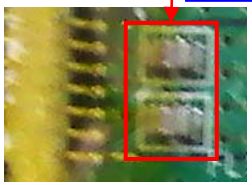

Pin 14,15 : 18V

① Check Input voltage

ⓒ LG Electronics. Inc.2009

▣ Dot type Mal-discharge symptom

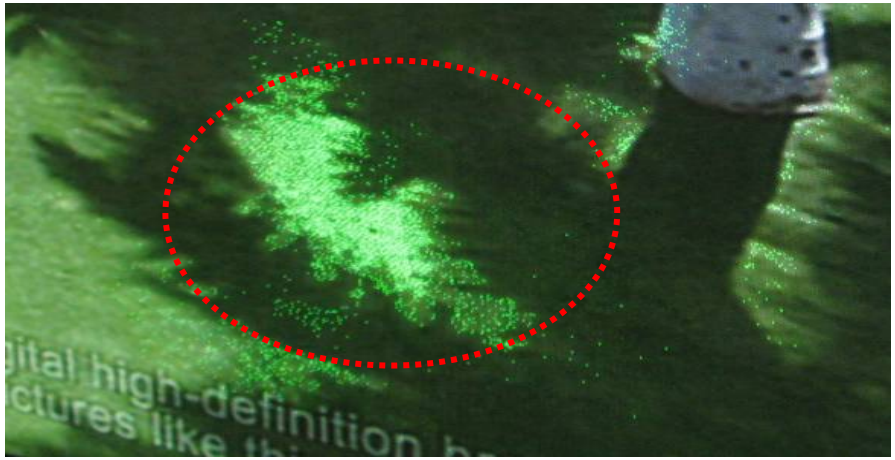

▣ Dark picture caused by Mal-discharge

▣ Scan type Mal-discharge symptom

ⓒ LG Electronics. Inc.2010

Repair Process-Reference data

PDP TV	Symptom	A. Picture Problem	Making	2010. 12 . 24	전자 - 6-2
		PDP Module Rom Ver. Checking method	Revision		A15

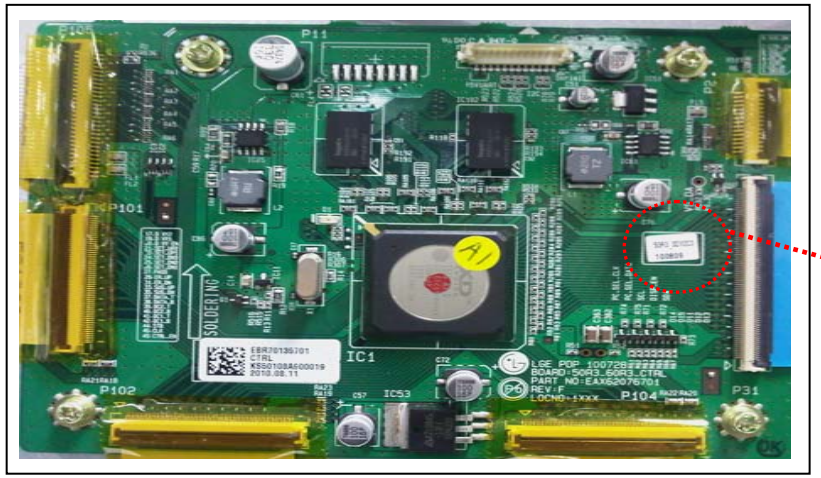

▣ **Check by using SVC Remote controller**

Press "In-start" →Press "0413"

→ Select Panel Control → Check Module Rom ver.

※Refer to the Module Rom upgrade manual for Rom upgrade.

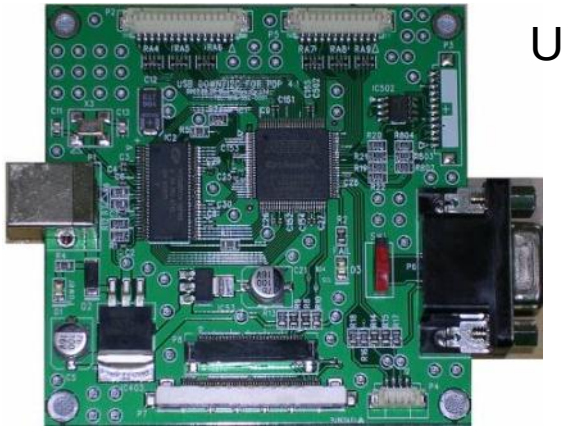

USB Type Jig

ⓒ LG Electronics. Inc.2010

▣ Y drive board

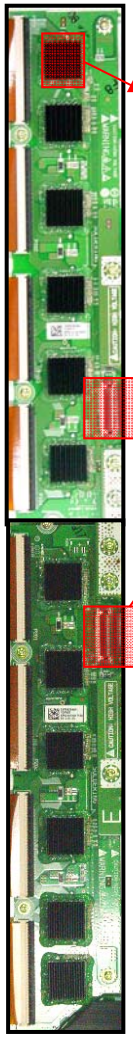

※ DMM (Digital Multi-Meter)

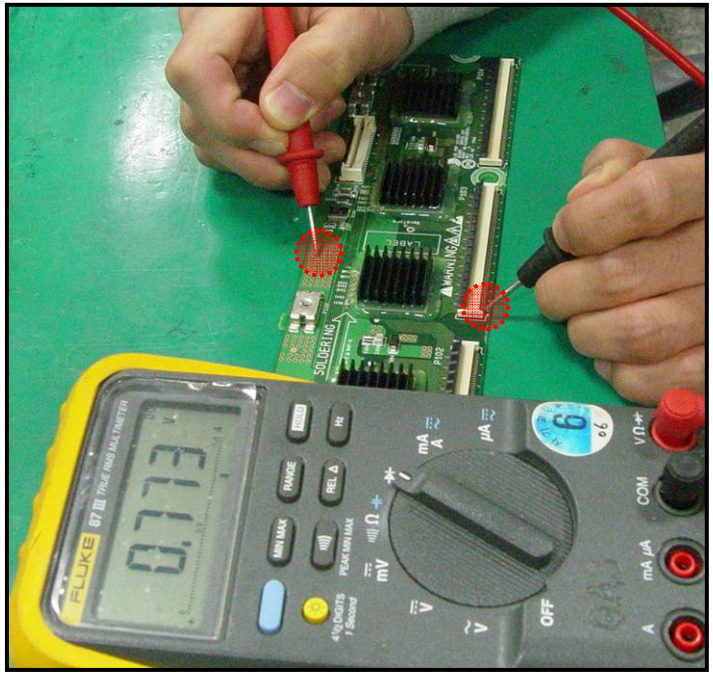

※ Check all output pins of scan IC (connector) using DMM.

ⓒ LG Electronics. Inc.2010

Repair Process-Reference data

PDP TV	Symptom	A. Picture Problem	Making	2010. 12 . 24	전자 - 6-2
		(Half picture) X- B/D Checking method(50R3)	Revision		A18

▣ Half / partly display (or abnormal display)

-. Check Va input voltage.
(P121, P120, P220, P221, P320 : Power connector of the X board)
-. Check cables between CTRL board and X board.
-. Replace the X B/D.
-. Check TCP connection after X B/D replacement.

	Picture 1.	Picture 2.	Picture 3.
Half display (abnormal)	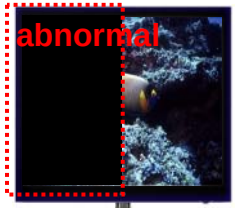		
Partly display (abnormal)	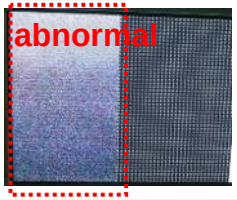	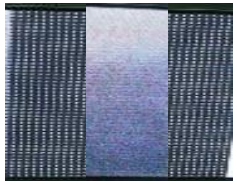	

▣ Connections between panel and X B/D

-. Right display (Picture 1.) ↔ Check/replace right X B/D
-. Both ends display (Picture 2.) ↔ Check/replace center X B/D
-. Left display (Picture 3.) ↔ Check/replace left X B/D

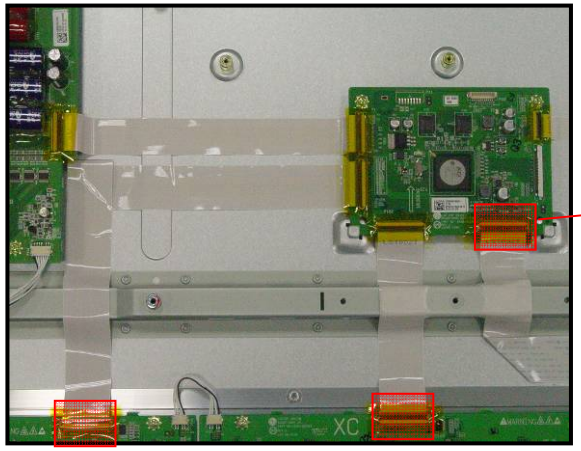

※ Check connections (TCP - X board, CTRL board - X board)

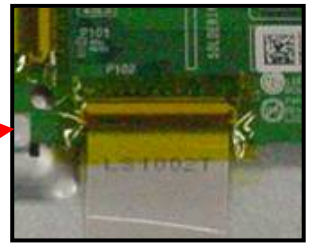

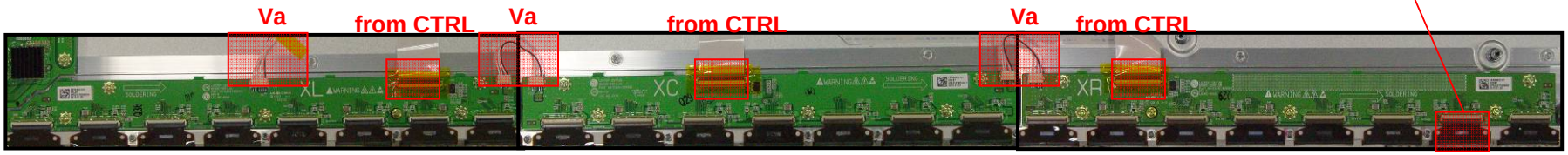

ⓒ LG Electronics. Inc.2010

PDP TV	Symptom	A. Picture Problem	Making	2010. 12 . 24	전자 - 6-2
		Defect type cause by PDP Module	Revision		A19

First of all, Check whether all of cable between board was inserted properly or not.
Next, Check whether there is foreign material on connector.

Symptom picture	defects description	To action
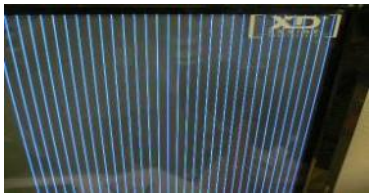	Regular vertical lines	1. Check connection (CTRL B/D, X B/D) 2. Check CTRL B/D 3. Replace CTRL B/D
	Vertical lines or Bar	1. Check connection (CTRL B/D, X B/D) 2. Check CTRL B/D 3. Replace CTRL B/D
	Many irregular vertical lines	1. Check connection (CTRL B/D, X B/D) 2. Check CTRL B/D 3. Replace CTRL B/D
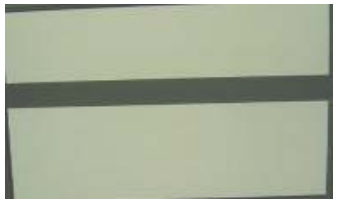	Horizontal Line or Bar	1. Check connection (Y-Sus B/D ↔Panel) 2. Check Y-Sus B/D 3. Replace Y-Sus B/D

ⓒ LG Electronics. Inc.2010

Repair Process-Reference data

PDP TV	Symptom	A. Picture Problem	Making	2010. 12 . 24	전자 - 6-2
		Connector Type on PDP Module	Revision		A20

COF Type

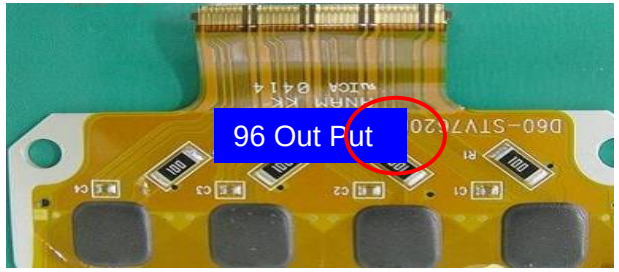

1. Check foreign & Connection status
2. Check bad soldering
   on Chip resistance

TCP Type

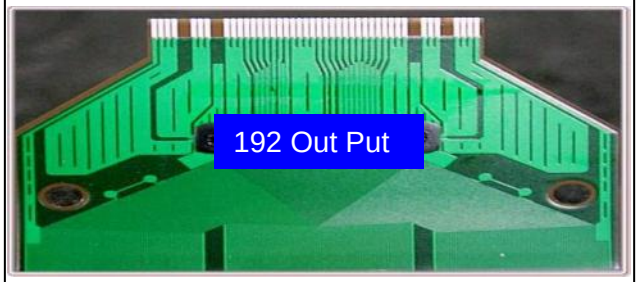

TCP (Tape Carrier Package) is film
for IC connect with Electrode pattern
(Direct Bonding) on X B/D

FFC Type

Connector to connect between
Electrode PAD Of PANEL and
Y Drive B/D,Z-Sus B/D

▣ **Defect symptom**

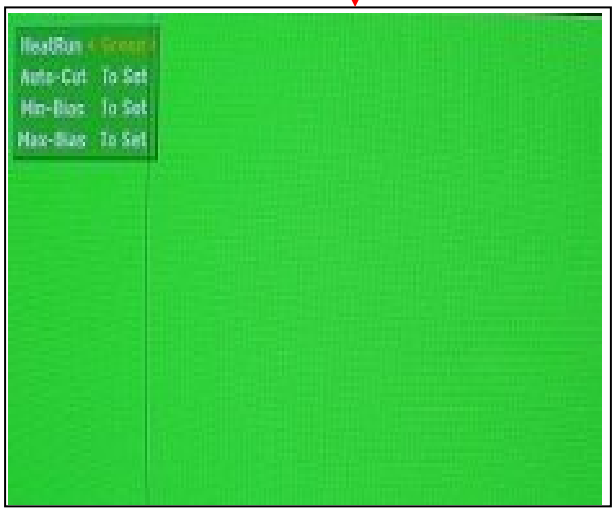

ⓒ LG Electronics. Inc.2010

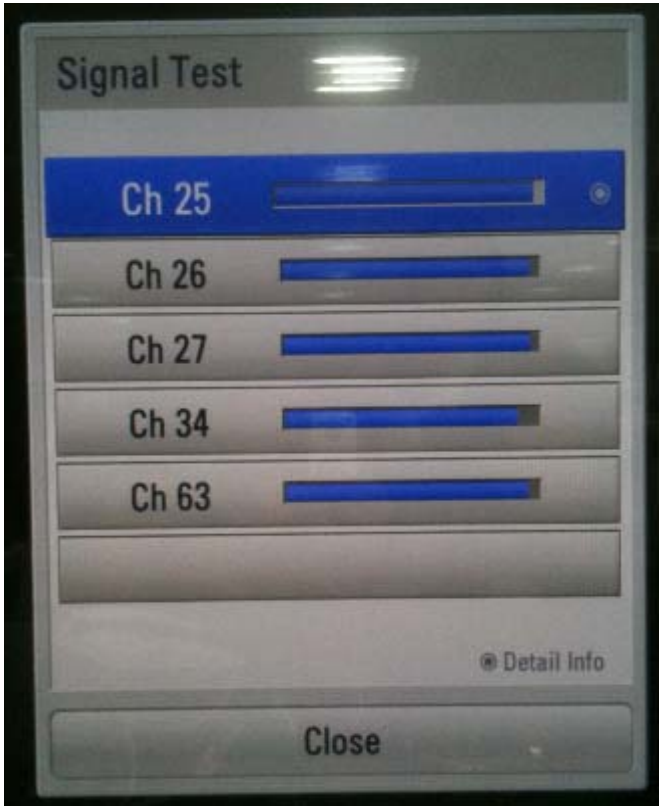

◆ MENU → SUPPORT → Signal TEST

1. Check whether Signal Strength, Signal Quality is over 50% or not.
2. If Signal Strength, Signal Quality is under 50%,install the Booster to increase signal level.

ⓒ LG Electronics. Inc.2010

PDP TV	Symptom	B. Power Problem	Making	2010. 12 . 24	전자 - 6-2
		Check voltage on Power board	Revision		A22

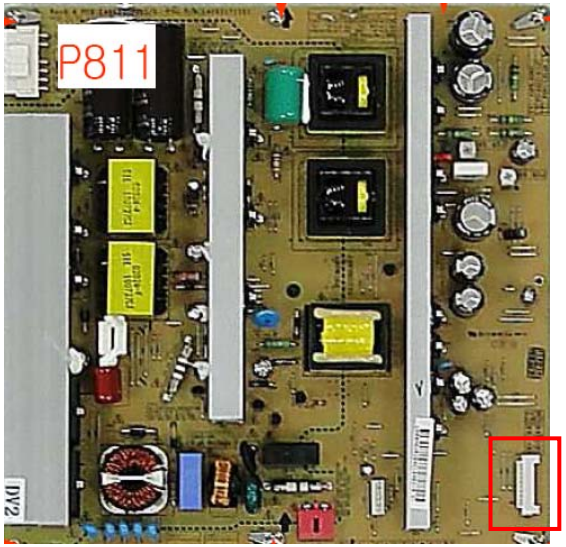

Pin Map
Power B/D↔Main B/D

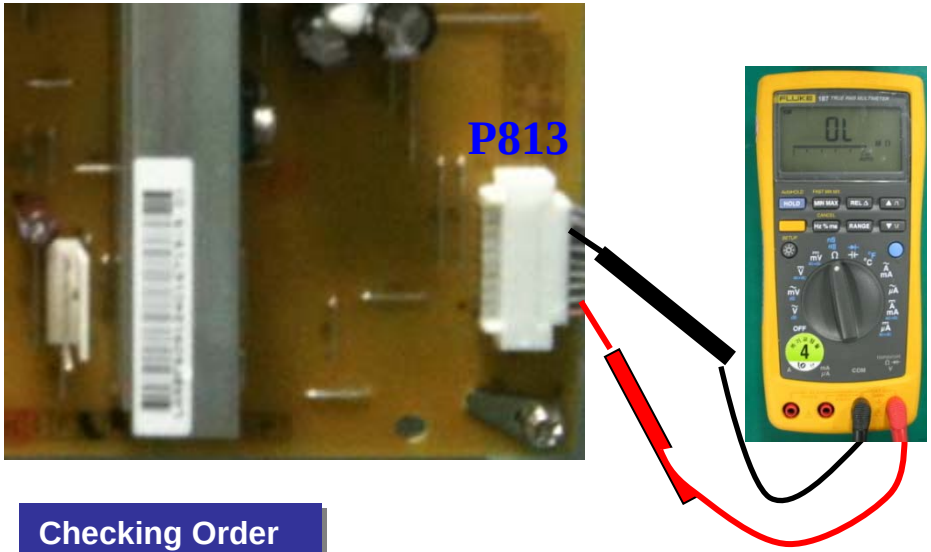

Checking Order

P813			
1	17V	2	17V
3	GND	4	GND
5	5V	6	5V
7	5V	8	Error_DET
9	GND	10	GND
11	GND	12	GND
13	STBY	14	STBY
15	RL_ON	16	AC DET
17	M_ON	18	AUTO_GND
Wafer	SMAW200-H18S2		

No.	Checking Point	Spec	Remark
1	STBY	5V	
2	5V	5V	
3	17V	17V	
4	AC DET	High(3.3V~5V)	
5	RL_ON	High(3.3V~5V)	
6	M_ON	High(3.3V~5V)	

ⓒ LG Electronics. Inc.2010

PDP TV	Symptom	B. Power Problem	Making	2010. 12 . 24	전자 - 6-2
		Power board Checking Method	Revision		A23

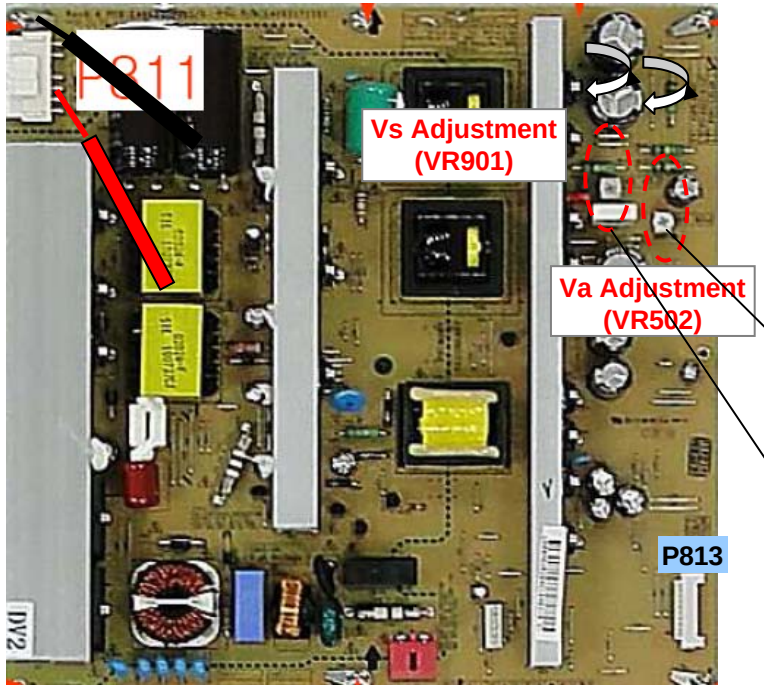

Power B/D↔ Y-Sus B/D(P811)

◆ Check 5V,Va,Vs voltage

: For Voltage specification, refer to the PDP Module Label.

Pin	P811/812
1	Vs
2	Vs
3	NC
4	GND
5	GND
6	Va
7	Va
8	GND
9	M5V
10	M5V
Wafer	YAW396-10V

Va Voltage ADJ

◆ Adjust Va,Vs voltage.

Vs Voltage ADJ

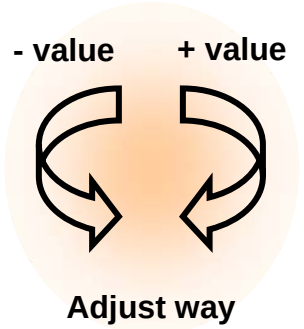

A3

▣ Checking Method

① Check soldering status on each major component.

② Check there is problem on major component or not by eye. (CONDENSER, FET, IC, Resistor)

③ Check FUSE.

④ Check 5V,Va,Vs voltage

※ PSU Maker: 1) LGIT 2) LITEON 3) YUYANG

※ If happen Power board Protection,

check whether there is Short or Open on Y-SUS, Z-SUS B/D or not.

ⓒ LG Electronics. Inc.2010

PDP TV	Symptom	B. Power Problem	Making	2010. 12 . 24	전자 - 6-2
		Check Power off History	Revision		A24

▣ **Check Power off History by using SVC Remote controller**

Press "In-start" →Press" 0000" → Select "Power Off History" → Pop up Module Rom ver.

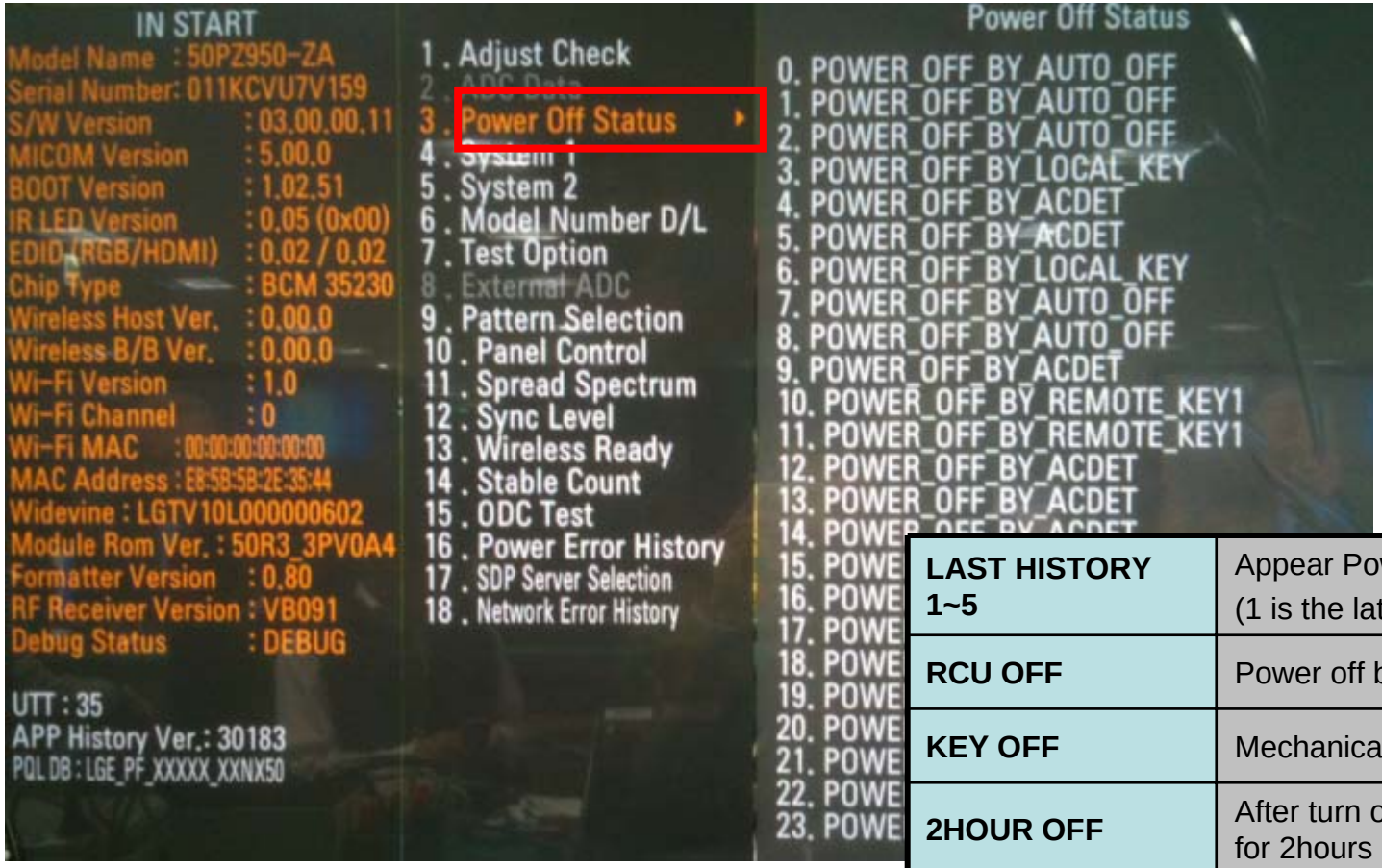

LAST HISTORY 1~5	Appear Power off history 5ea. (1 is the latest history)
RCU OFF	Power off by Remote control
KEY OFF	Mechanical power switch off
2HOUR OFF	After turn on by OnTimer, There is no operation for 2hours
NO SIGNAL OFF	In case that there is no signal for 15minutes

ⓒ LG Electronics. Inc.2010

PDP TV	Symptom	C. Sound Problem	Making	2010. 12 . 24	전자 - 6-2
		Speaker cable checking method	Revision		A25

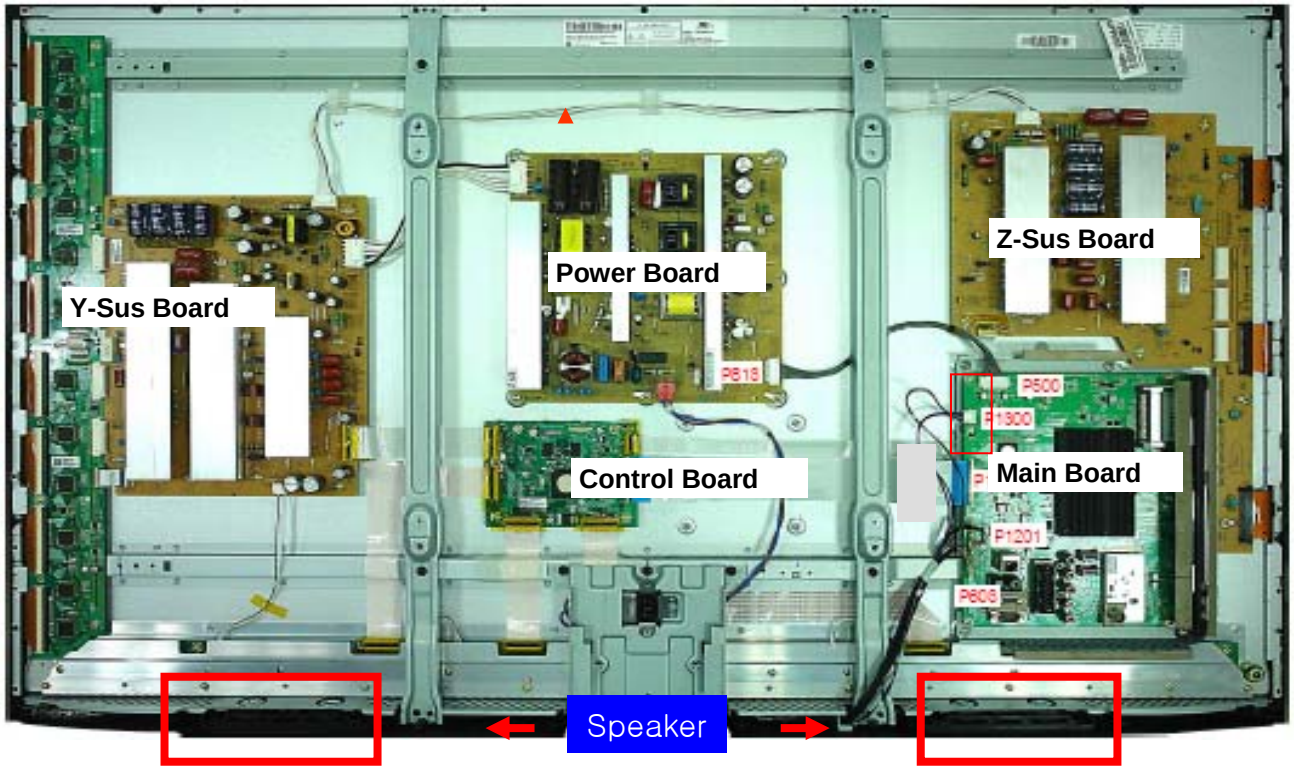

1.Check whether speaker jack was inserted properly on Main B/D side & speaker side or not.
2. Check whether speaker cable have problem (disconnection wire) or not.

ⓒ LG Electronics. Inc.2010

PDP TV	Symptom	D. General function defect	Making	2010. 12 . 24	전자 - 6-2
		Check Remote control IR operation	Revision		A26

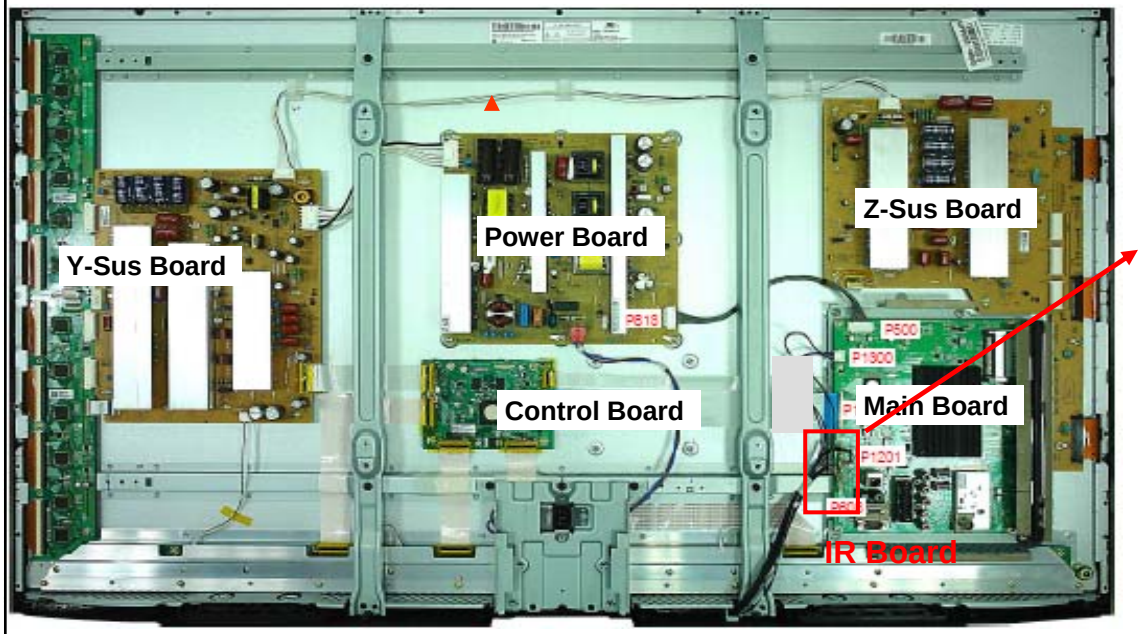

IR
GND
KEY1
KEY2
LED-RED
GND
SCL
SDA
BLUE_LED_ON
+3.3V_ST
+3.3V_Normal/ +5V_MULTI
3.3V Multi
LED_Power_On
TOUCH_Ver_CHECK
-
-

▣ Checking method

1.Check connector was inserted properly on Main board and IR board.

2. Check +3.3V ST Voltage at Pin10

3. Check whether appear voltage on multi meter when operate remote control.

※ Test Condition for case 3

→ Check Point: Pin 1(IR)

→ TV: power on status

→ Multi meter: Select DC 10V

IR/KEY Board for XXPZ7/90XX

ⓒ LG Electronics. Inc.2010

Repair Process-Reference data

PDP TV	Symptom	D. General function defect	Making	2010. 12 . 24	전자 - 6-2
		Check Local Key operation			A27

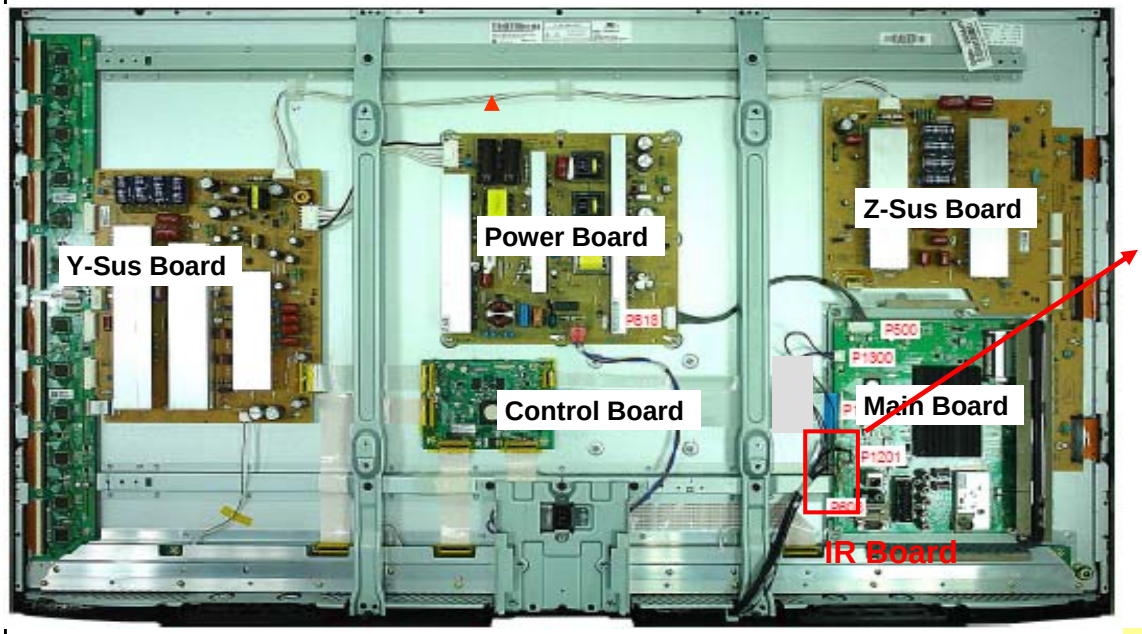

IR
GND
KEY1
KEY2
LED-RED
GND
SCL
SDA
BLUE_LED_ON
+3.3V_ST
+3.3V_Normal/ +5V_MULTI
3.3V Multi
LED_Power_On
TOUCH_Ver_CHECK
-
-

CH+	CH-	Vol+	Vol-	OK	HOME	Input	

1.Check connector was inserted properly
on Main board and local switch board.
[If mechanical switch off status, Key-on is high(3.3v)]

2. Check whether appear voltage on multi meter
when operate Local switch.
※ Test Condition for case 3
→ Check Point: Pin 3,4(Key1,Key2)
→ TV: power on status
→ Multi meter: Select DC 10V

IR/KEY Board for XXPZ7/90XX

ⓒ LG Electronics. Inc.2010